HORUS

2022 PRICELIST

aloredesign.com
streamlinecanada.ca

TABLE OF CONTENTS

CLASSIC COLLECTIONS

MONTMARTRE. 4

ST-GERMAIN 14

MONTMARTRE & ST-GERMAIN ACCESSORIES. . 24

ASCOTT 26

ASCOTT ACCESSORIES. 33

ANTHEA 35

DOVER 40

DOVER ACCESSORIES. 45

ELOISE 47

MONROE 53

CONTEMPORARY COLLECTIONS

MYRIAD 58

ECHO 66

NEW WAVE 70

MORE

SHOWER 76

KITCHEN 80

REPLACEMENT PARTS 87

WARRANTIES 95

NOTE!
This check mark symbol indicates IN STOCK items, and which finishes are in stock.
In stock items ship in 24 hours

HORUS Standard Finishes: 7-9 week lead time

ALL NON-LIVING FINISHES ARE LACQUERED AND PROTECTED

PC
Polished Chrome

PN
Polished Nickel

BN
Brushed Nickel

UB
Unlacquered Brass
*** Living Finish ***

UB IS NON-RETURNABLE.

HORUS Specialty Finishes: 9-11 week lead time

GB
Golden Brass

AB
Antique Brass

CB
Cannon Bronze

NC
Black Chrome

SPECIALTY FINISHES INCLUDING GB, AB, CB & NC ARE SPECIAL ORDERS ONLY WITH EXTENDED LEAD TIMES AND ARE NON-RETURNABLE.

HORUS Luxury Finishes: 9-11 week lead time

PG
Polished Gold
*** Living Finish ***

MG
Matte Gold

PS
Polished Silver
*** Living Finish ***

AS
Antique Silver

LUXURY FINISHES INCLUDING PG, MG, PS & AS ARE SPECIAL ORDERS ONLY WITH EXTENDED LEAD TIMES AND ARE NON-RETURNABLE.

HORUS Caps

White Porcelain Indices are standard

Standard

Chaud

Froid

Option: Metal Indices all finishes

Blank

Hot

Cold

All metal indice caps are special order items, see pages 105 - 110

FOR ALL PRODUCT IN ALL METAL INDICES, POP UPS RODS AND HANDSHOWERS, ADD MH BEFORE THE FINISH CODE, I.E. 102.62.434MHPN

10% UPCHARGE APPLIES TO ALL PRODUCTS, EXCEPT EXPOSED SHOWERS AT 3%, TUB FILLERS .434/.435/.498 AT 5%

CAL GREEN

Items available in Cal Green certification.
Items available in California code.

FINISH OF THE FAUCET

All Horus drains match the finish of the faucet.

Montmartre

07 | 50 Montmartre

3-Hole Basin Mixer

102.07.260

102.50.260

- Swivel Spout
- ¼-Turn Ceramic Disc
- Flow Rate: 2.2 GPM
- CalGreen Low Flow Aerator and Low Lead Available

Retail Price

PC	$1650 ✓
PN	$1735 ✓
BN	$1805
UB/AB	$2115
CB/GB	$2760
PG/MG	$2885
PS/AS	$3015

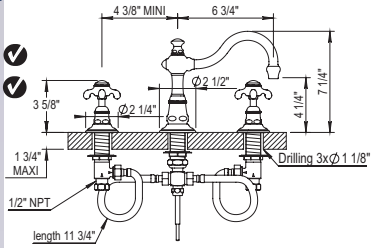

3-Hole Gooseneck Basin Mixer

102.07.261

102.50.261

- Swivel Spout
- ¼-Turn Ceramic Disc
- Flow Rate: 2.2 GPM
- CalGreen Low Flow Aerator and Low Lead Available

PC	$1210
PN	$1220
BN	$1250
UB/AB	$1675
CB/GB	$1915
PG/MG	$2285
PS/AS	$2395

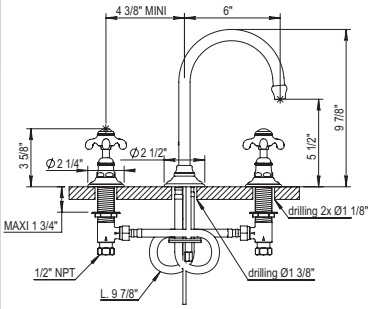

3-Hole Wall Mounted Basin Mixer

102.07.262

102.50.262

Trim Only available: i.e.
102.07.262PN-**TO**
Deduct $320 from complete list for Trim only Pricing

- Swivel Spout
- ¼-Turn Ceramic Disc
- Lift & Turn Drain HOP93.011
- Flow Rate: 2.2 GPM
- Roughs Available: Ref 100.92.046BT & 100.92.048BT **(Page 32)**
- CalGreen Low Flow Aerator and Low Lead Available

PC	$1565
PN	$1635 ✓
BN	$1760
UB/AB	$2160
CB/GB	$2655
PG/MG	$2935
PS/AS	$3075

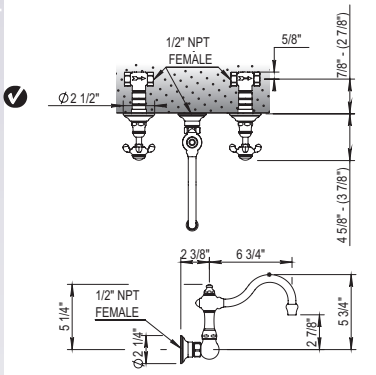

2-Hole Bridge Basin Mixer

102.07.207

102.50.207

- Swivel Spout
- ¼-Turn Ceramic Disc
- Lift & Turn Drain
- Flow Rate: 2.2 GPM
- CalGreen Low Flow Aerator and Low Lead Available

PC	$1600
PN	$1675
BN	$1795
UB/AB	$2215
CB/GB	$2720
PG/MG	$2980
PS/AS	$3085

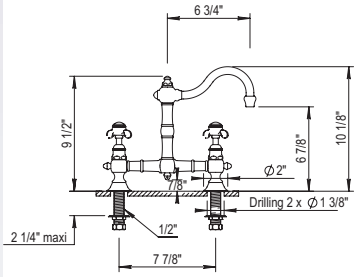

Emily Single Lever Basin Mixer

100.01.708

- Swivel Spout
- Ceramic Disc Cartridge
- Flow Rate: 2.2 GPM
- All Metal Lever Handle Available
- CalGreen Low Flow Aerator and Low Lead Available

PC	$1090
PN	$1145
BN	$1310
UB/AB	$1735
CB/GB	$1960
PG/MG	$2345
PS/AS	$2460

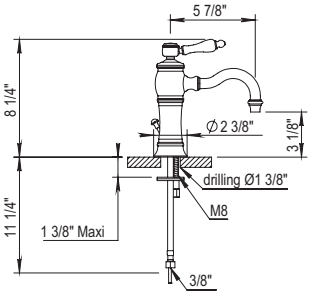

✓ **NOTE!** This check mark symbol indicates IN STOCK

07 | 50 Montmartre

Emily Single Lever Basin Mixer

100.02.708

- Swivel Spout
- Ceramic Disc Cartridge
- Flow Rate: 2.2 GPM
- All Metal Lever Handle Available
- CalGreen Low Flow Aerator and Low Lead Available

Retail Price

PC	$1090
PN	$1145
BN	$1310
UB/AB	$1735
CB/GB	$1960
PG/MG	$2345
PS/AS	$2460

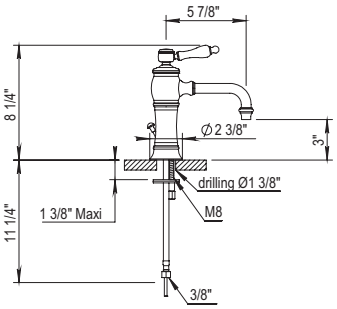

Emily Single Lever Vessel Mixer

100.01.703

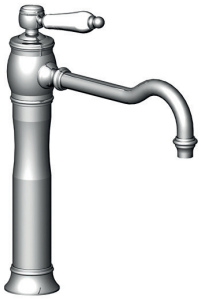

- Swivel Spout
- Ceramic Disc Cartridge
- Flow Rate: 2.2 GPM
- All Metal Lever Handle Available
- **Drain is Not Included**
- Lift And Turn Drain Available On Request HOP92.023 (p.91)
- CalGreen Low Flow Aerator and Low Lead Available

PC	$1165
PN	$1220
BN	$1355
UB/AB	$1645
CB/GB	$2040
PG/MG	$2250
PS/AS	$2345

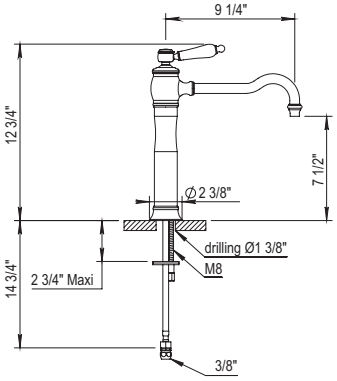

Emily Single Lever Vessel Mixer

100.02.703

- Swivel Spout
- Ceramic Disc Cartridge
- Flow Rate: 2.2 GPM
- All Metal Lever Handle Available
- **Drain is Not Included**
- Lift And Turn Drain Available On Request HOP92.023 (p.91)
- CalGreen Low Flow Aerator and Low Lead Available

PC	$1165
PN	$1220
BN	$1355
UB/AB	$1645
CB/GB	$2040
PG/MG	$2250
PS/AS	$2345

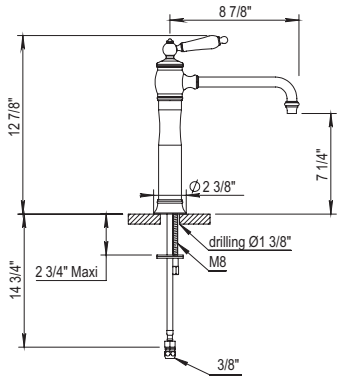

Single Hole Two-Handle Basin Mixer

102.07.208

- Swivel Spout
- ¼-Turn Ceramic Disc
- Flow Rate: 2.2 GPM
- CalGreen Low Flow Aerator and Low Lead Available

PC	$1370
PN	$1430
BN	$1450
UB/AB	$1925
CB/GB	$2325
PG/MG	$2595
PS/AS	$2725

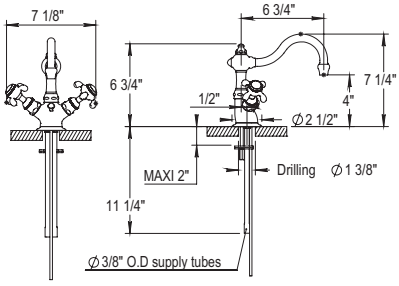

Accessories on page 24

07 | 50 Montmartre

Basin Pillar Tap

102.07.231

102.50.231

- Fixed Spout
- ¼-Turn Ceramic Disc
- No Aerator

Retail Price	
PC	$445
PN	$475
BN	$520
UB/AB	$615
CB/GB	$740
PG/MG	$840
PS/AS	$875

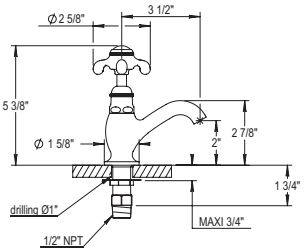

Single Hole Two-Handle Bidet Mixer

102.07.311

- Swivel Spout
- ¼-Turn Ceramic Disc
- 40º Rotating Aerator

PC	$1265
PN	$1320
BN	$1420
UB/AB	$1700
CB/GB	$2145
PG/MG	$2365
PS/AS	$2465

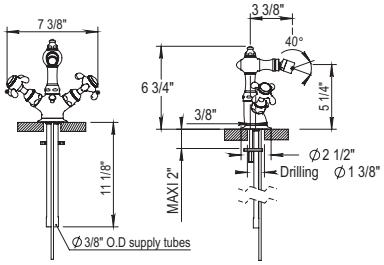

Exposed Wall Mounted Tub Filler with Handshower

102.07.434

102.50.434

ANTI-SCALE NOZZLES

- Fixed Spout
- ¼-Turn Ceramic Disc
- 59” Shower Hose
- Flow Rate: 11 GPM
- Vacuum Breaker Built Inside the Body
- All Metal Handle Available
- Anti-calcium Handshower

07.434: Middle handle Lever
50.434: Middle handle Cross

PC	$3475
PN	$3735 ✓
BN	$3970
UB/AB	$4790
CB/GB	$5900
PG/MG	$6485
PS/AS	$6795

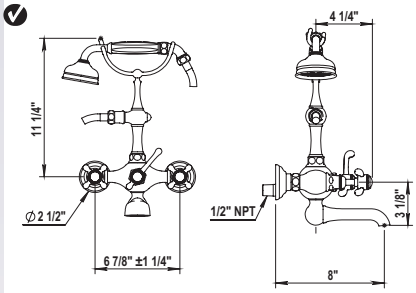

Exposed Deck Mounted Tub Filler with Handshower

102.07.435

102.50.435

ANTI-SCALE NOZZLES

- Fixed Spout
- ¼-Turn Ceramic Disc
- 59” Shower Hose
- Excentrical Centers ±1”
- Flow Rate: 11 GPM
- Vacuum Breaker Built Inside the Body
- All Metal Handle Available
- Anti-calcium Handshower

07.435: Middle handle Lever
50.435: Middle handle Cross

PC	$3995
PN	$4225 ✓
BN	$4490
UB/AB	$5615
CB/GB	$6915
PG/MG	$7615
PS/AS	$7985

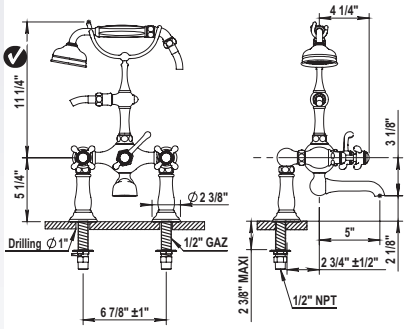

✓ **NOTE!** This check mark symbol indicates IN STOCK

07 | 50 Montmartre

Exposed Floor Mounted Tub Filler with Handshower

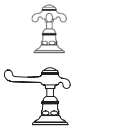

102.07.498

102.50.498

- Fixed Spout
- ¼-Turn Ceramic Disc
- 59” Shower Hose
- ¾” NPT Connections
- Flow Rate: 11 GPM
- Vacuum Breaker Built Inside The Body
- All Metal Handle Available
- Anti-calcium handhower

	Retail Price
PC	$4675
PN	$4720 ✔
BN	$5230
UB/AB	$6380
CB/GB	$7735
PG/MG	$8750
PS/AS	$9160

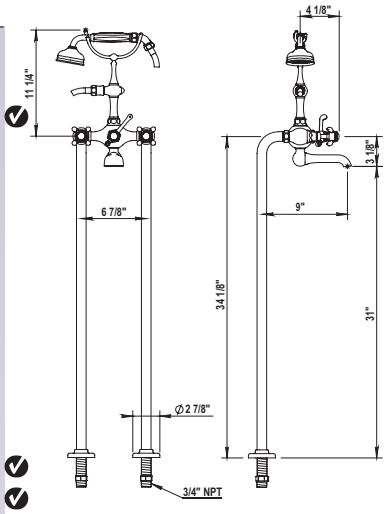

100.00.499

T-Connector for Floor Risers

- Drain Diameter: 1” min to 1 ½” max

Floor installed version on page 55

PC	$770 ✔
PN	$825 ✔
BN	$915
UB/AB	$1065
CB/GB	$1305
PG/MG	$1435
PS/AS	$1495

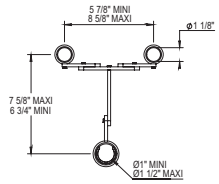

4-Hole Deck Tub Shower Set With Handshower

102.07.464

102.50.464

- ¾” ¼-Turn Ceramic Disc
- Fixed Spout with Integrated Diverter
- Retractable handshower with 79” Hose
- Flow Rate: 14 GPM
- All Metal Handle Available
- Anti-calcium handshower

PC	$2500
PN	$2585
BN	$2740
UB/AB	$3450
CB/GB	$4250
PG/MG	$4685
PS/AS	$4895

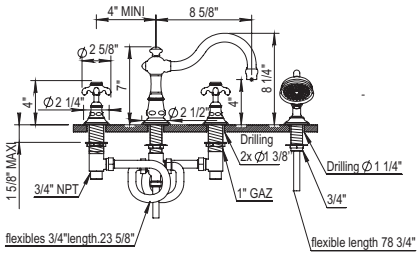

3-Hole Deck Tub Shower Set

102.07.463

102.50.463

- Fixed Spout.
- Includes T Connection
- Includes Hoses
- Flow Rate: 14 GPM
- ¼-Turn Ceramic Disc

PC	$1740
PN	$1785
BN	$1880
UB/AB	$2405
CB/GB	$2955
PG/MG	$3245
PS/AS	$3415

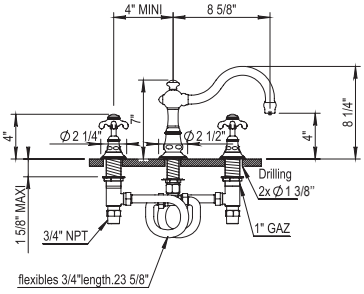

8” Tub Spout

102.07.471

- Solid Brass
- ¾” Female NPT

PC	$445
PN	$470 ✔
BN	$515
UB/AB	$615
CB/GB	$765
PG/MG	$845
PS/AS	$875

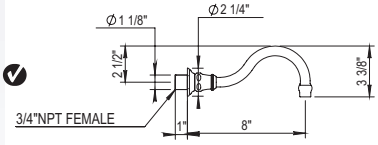

 Accessories on page 24

07 | 50 Montmartre

Exposed Thermostatic Valve with Tub Spout

102.07.754-10

NEW! Larger Showerhead Standard

ANTI-SCALE NOZZLES

- Two ¼-Turn Ceramic Disc Volume Control
- 10.6” Showerhead
- 60” Handshower Hose
- Integrated Diverter for Handshower
- Includes Anti-calcium Handshower, Hose and Wall Hook
- Flow Rate: 9 GPM
- All Metal Handle Available
- **Integrated Service Stops**
- Showerhead Restrictor Available Upon Request
- Option to change to 8’’ showerhead by ordering **102.07.754**
- Showerhead with 50° rotating ball joint

Retail Price

PC	$7925
PN	$8265
BN	$8725
UB/AB	$10,915
CB/GB	$13,475
PG/MG	$14,825
PS/AS	$15,445

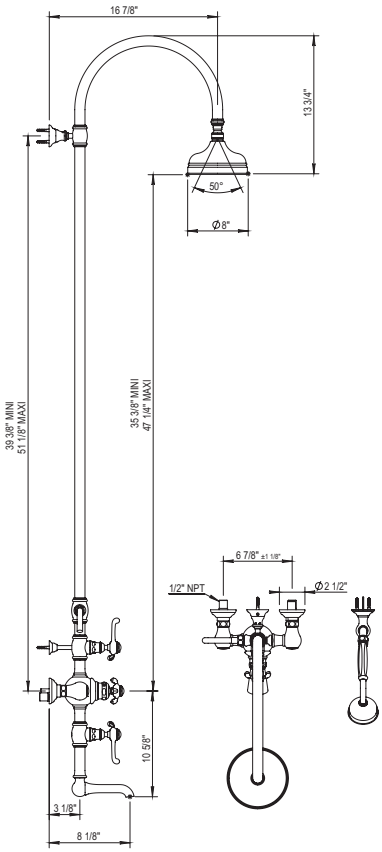

Exposed Thermostatic Valve with Handshower

102.07.744-10

NEW! Larger Showerhead Standard

ANTI-SCALE NOZZLES

- Two ¼-Turn Ceramic Disc Volume Control
- 10.6” Showerhead
- 60” Handshower Hose
- Includes Anti-calcium Handshower, Hose and Wall Hook
- Flow Rate: 9 GPM
- All Metal Handle Available
- Integrated Service Stops
- Can Come Plugged Under Second Volume Control With Hand Shower And Hose
  Separate Upon Request.
- Showerhead Restrictor Available Upon Request
- Option to change to 8’’ showerhead by ordering **102.07.744**

PC	$7220
PN	$7555
BN	$8155
UB/AB	$10250
CB/GB	$12,600
PG/MG	$13,900
PS/AS	$14,415

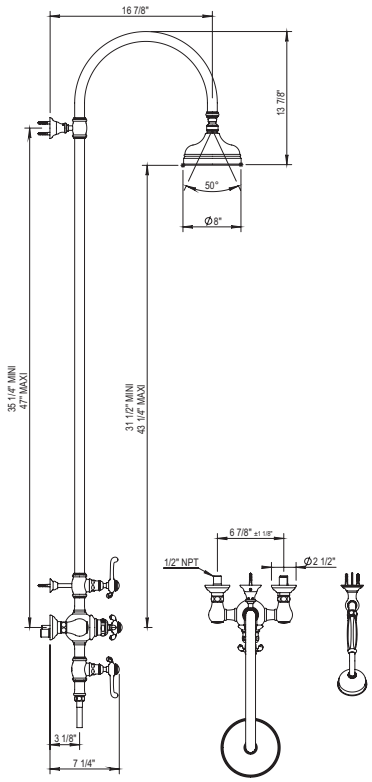

NOTE! This check mark symbol indicates IN STOCK

07 | 50 Montmartre

¾” Thermostatic Rough with Service Stops & Montmartre Thermostatic Trim

			Retail Price
100.92.591BT	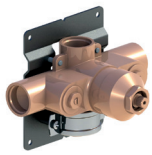	See page 30 for details	$690 ✓

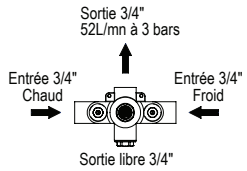

			Retail Price
102.07.521 **102.50.521**		• Trim Plate for 100.92.591BT • Solid Brass	**PC** $995 ✓ **PN** $1035 ✓ **BN** $1090 **UB/AB** $1365 **CB/GB** $1700 **PG/MG** $1880 **PS/AS** $1950

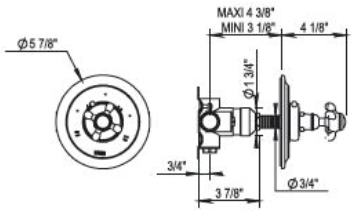

			Retail Price
102.07.507 **102.50.507**	 **NEW!**	• Trim Plate for 100.92.591BT • Solid Brass	**PC** $965 **PN** $995 **BN** $1060 **UB/AB** $1440 **CB/GB** $1645 **PG/MG** $1980 **PS/AS** $2050

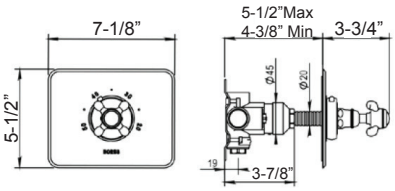

¾” Thermostatic Rough with Integrated Diverter & Montmartre Thermostatic Trim

			Retail Price
100.92.593BT		See page 30 for details	$1370

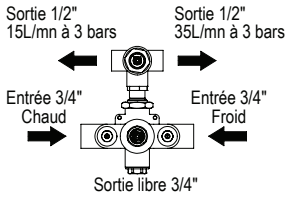

			Retail Price
102.07.502 **102.50.502**		• Single Function 2-Way Diverter • Trim Plate for 100.92.593BT • Solid Brass • Safety Stop @ 37 °C (99 Fahrenheit)	**PC** $1430 ✓ **PN** $1560 ✓ **BN** $1770 **UB/AB** $1985 **CB/GB** $2430 **PG/MG** $2675 **PS/AS** $2775

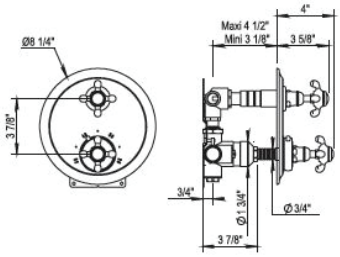

			Retail Price
102.07.508 **102.50.508**	 **NEW!**	• Single Function 2-Way Diverter • Trim Plate for 100.92.593BT • Solid Brass • Safety Stop @ 37 °C (99 Fahrenheit)	**PC** $1375 **PN** $1495 **BN** $1730 **UB/AB** $2035 **CB/GB** $2335 **PG/MG** $2780 **PS/AS** $2920

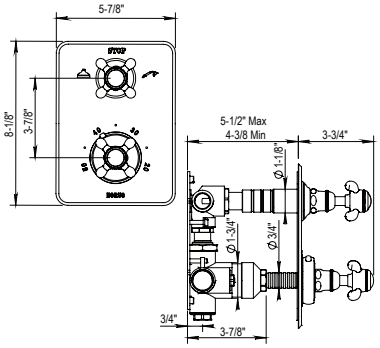

 Accessories on page 24

07 | 50 Montmartre

¾” Thermostatic Rough with Integrated Diverter & Montmartre Thermostatic Trim

Retail Price

100.92.599BT

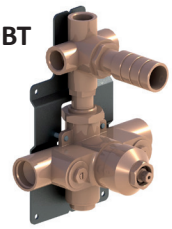

- ¾” NPT Inlets
- ¾” NPT Outlets
- Safety Stops @ 37 °C (99 Fahrenheit)
- 14 GPM @ 45 PSI
- 1 Outlet Plug Supplied
- Single Function 3-Way Diverter
- Integrated Service Stops

$1420 ✓

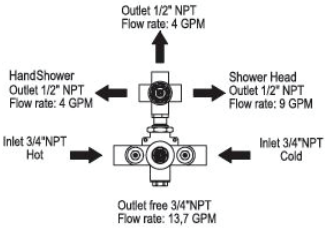

102.07.529

102.50.529

- Single Function 3-Way Diverter
- Trim Plate for 100.92.599BT
- Solid Brass
- Safety Stop @ 37 °C (99 Fahrenheit)

PC	$1445
PN	$1575
BN	$1840
UB/AB	$1985
CB/GB	$2460
PG/MG	$2705
PS/AS	$2835

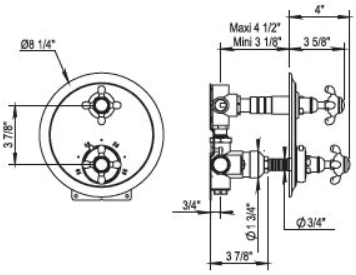

¾” Thermostatic Rough & Montmartre Thermostatic Trim

102.92.524BT

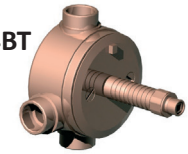

- ¾” NPT Inlets
- ¾” NPT Outlets
- Safety Stop @ 37 °C (99 Fahrenheit)
- 20 GPM @ 45 PSI
- 1 Outlet Plug Supplied
- No Service Stops

$2180 ✓

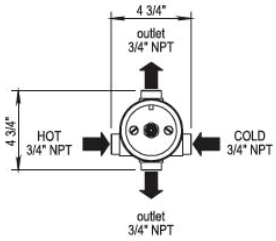

102.07.521

102.50.521

- Trim Plate for 102.92.524BT
- Solid Brass

PC	$995 ✓
PN	$1035 ✓
BN	$1090
UB/AB	$1365
CB/GB	$1700
PG/MG	$1880
PS/AS	$1950

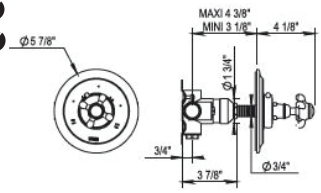

✓ **NOTE!** This check mark symbol indicates IN STOCK

07 | 50 Montmartre

Montmartre Volume Control Trim Only

Retail Price

102.07.578

102.50.578

- Trim for ½" or ¾" Volume Control Roughs
- Trim for in Wall Diverters

PC	$320
PN	$345
BN	$370
UB/AB	$440
CB/GB	$550
PG/MG	$610
PS/AS	$615

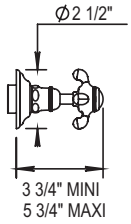

½" Volume Control Rough- Closing clockwise

100.92.046BT

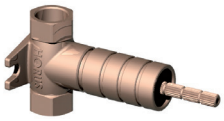

- Unfinished Brass
- ¼-Turn Ceramic Disc
- Flow Rate: 12 GPM @ 45 PSI
- Must Order Volume Control Trim

$160

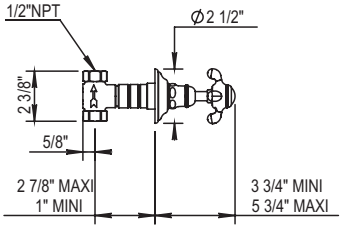

½" Volume Control Rough- Closing counterclockwise

100.92.048BT

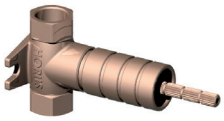

- Unfinished Brass
- ¼-Turn Ceramic Disc
- Flow Rate: 12 GPM @ 45 PSI
- Must Order Volume Control Trim

$160

¾" Volume Control Rough- Closing clockwise

100.92.047BT

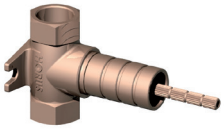

- Unfinished Brass
- ¼-Turn Ceramic Disc
- Flow Rate: 16 GPM @ 45 PSI
- Must Order Volume Control Trim

$180

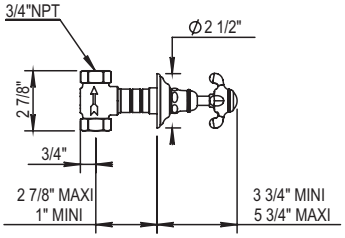

¾" Volume Control Rough- Closing counterclockwise

100.92.049BT

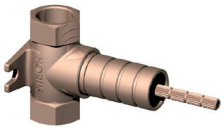

- Unfinished Brass
- ¼-Turn Ceramic Disc
- Flow Rate: 16 GPM @ 45 PSI
- Must Order Volume Control Trim

$180

½" Two way in wall diverter with no shared ports

100.92.030BT

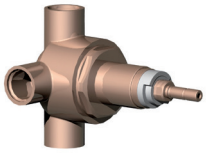

- 4-Way Concealed Diverter
- 2 Inlets / 2 Outlets
- Must Order Volume Control Trim

$475

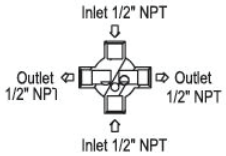

½" Three way in wall diverter with no shared ports

100.92.090BT

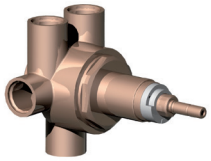

- 5-Way Concealed Diverter
- 2 Inlets / 3 Outlets
- Must Order Volume Control Trim

$530

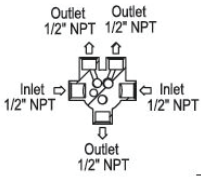

 Accessories on page 24

07 | 50 Montmartre

¾” Thermostatic Rough & Montmartre Thermostatic Trim

Retail Price

100.92.597BT

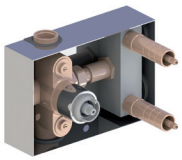

- ¾” NPT Inlets
- 2 x ½” NPT Outlets
- 14 GPM @ 45 PSI
- 1 Outlet Plug Supplied
- Integrated Service Stops for Each Outlet

$1580 ✓

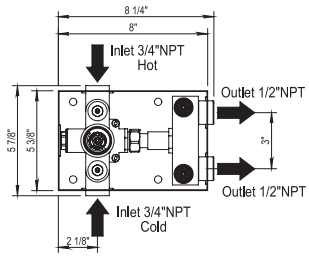

102.07.527

- Trim Plate for 100.92.597BT
- Solid Brass
- Plate is Reversible

PC	$1640 ✓
PN	$1730 ✓
BN	$1795
UB/AB	$2215
CB/GB	$2735
PG/MG	$3015
PS/AS	$3085

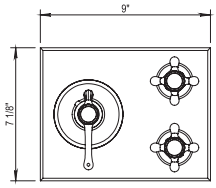

Vintage Handshower and Fixed Handshower Holder

100.01.589

ANTI-SCALE NOZZLES

- Wall Union
- 59’’ Metal Hose
- Fixed Handshower Holder
- Flow Rate: 2.2 GPM
- All Metal Handle Available
- Anti-calcium Handshower

PC	$765
PN	$810 ✓
BN	$875
UB/AB	$1025
CB/GB	$1330
PG/MG	$1470
PS/AS	$1540

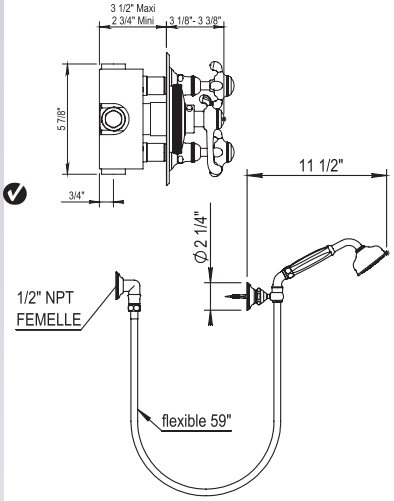

Vintage Handshower and Sliding Wall Bar Set

100.01.532

ANTI-SCALE NOZZLES

- Wall Union
- 59’’ Metal Hose
- Swiveling Handshower Holder
- 23 5/8’’ Sliding Wall Bar
- All Metal Handle Available
- Anti-calcium Handshower

PC	$1230 ✓
PN	$1240 ✓
BN	$1340
UB/AB	$1700
CB/GB	$2090
PG/MG	$2305
PS/AS	$2415

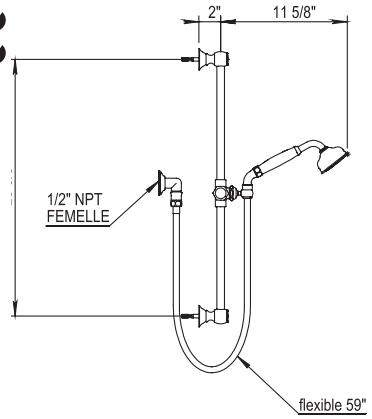

Massage Body Spray

100.00.573

ANTI-SCALE NOZZLES

- 1/2’’ NPT Adaptor Connection
- Anti-Calcium Massage Body Spray

PC	$215
PN	$245
BN	$305
UB/AB	$325
CB/GB	$345
PG/MG	$415
PS/AS	$435

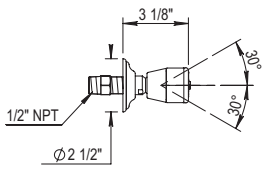

✓ **NOTE!** This check mark symbol indicates IN STOCK

Saint Germain

102
Cross Handle

160
Metal Lever Handle

161
White Porcelain Lever

162
Black Porcelain Lever

Saint Germain

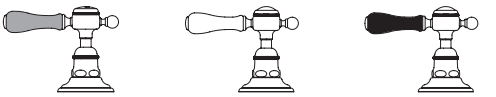

Metal Lever | White Porcelain Lever | Black Porcelain Lever

3-Hole Basin Mixer

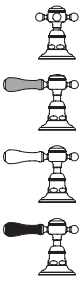

102.66.260
160.67.260
161.67.260
162.67.260

- Swivel Spout
- ¼-Turn Ceramic Disc
- Flow Rate: 2.2 GPM
- CalGreen Low Flow Aerator and Low Lead Available

Retail Price

PC	$1380 ✓
PN	$1495 ✓
BN	$1805
UB/AB	$2450
CB/GB	$2790
PG/MG	$3295
PS/AS	$3495

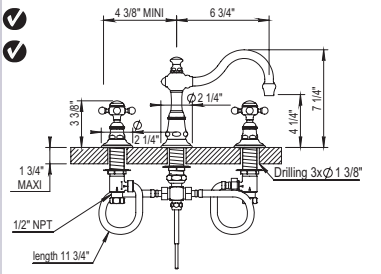

3-Hole Gooseneck Basin Mixer

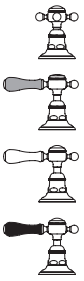

102.66.261
160.67.261
161.67.261
162.67.261

- Swivel Spout
- ¼-Turn Ceramic Disc
- Flow Rate: 2.2 GPM
- CalGreen Low Flow Aerator and Low Lead Available

PC	$1210 ✓
PN	$1220 ✓
BN	$1250
UB/AB	$1650
CB/GB	$1885
PG/MG	$2250
PS/AS	$2350

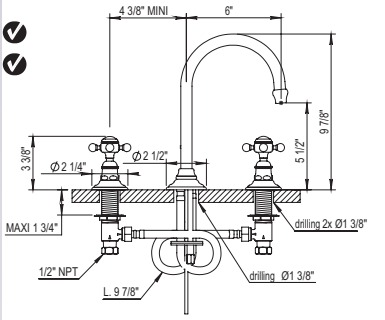

3-Hole Wall Mounted Basin Mixer

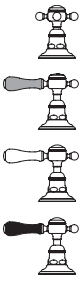

102.66.262
160.67.262
161.67.262
162.67.262

- Swivel Spout
- ¼-Turn Ceramic Disc
- Lift & Turn Drain HOP92.011
- Flow Rate: 2.2 GPM
- Roughs available: 100.92.046BT And 100.92.048BT (Page 32)
- CalGreen Low Flow Aerator and Low Lead Available

Trim Only available: i.e. 102.66.262PN-**TO**
Deduct $320 from complete list for Trim only Pricing

PC	$1565 ✓
PN	$1635 ✓
BN	$1760
UB/AB	$2160
CB/GB	$2655
PG/MG	$2935
PS/AS	$3070

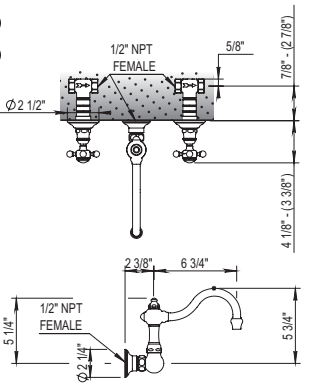

2-Hole Bridge Basin Mixer

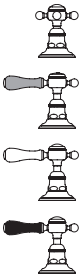

102.66.207
160.67.207
161.67.207
162.67.207

- Swivel Spout
- ¼-Turn Ceramic Disc
- Lift & Turn Drain
- Flow Rate: 2.2 GPM
- CalGreen Low Flow Aerator and Low Lead Available

PC	$1600
PN	$1675
BN	$1795
UB/AB	$2215
CB/GB	$2720
PG/MG	$2980
PS/AS	$3085

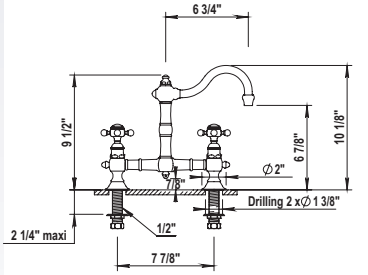

✓ **NOTE!** This check mark symbol indicates IN STOCK

Saint Germain

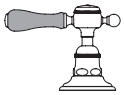
Metal Lever

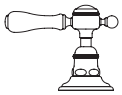
White Porcelain Lever

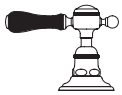
Black Porcelain Lever

Emily Single Lever Basin Mixer

Retail Price

100.01.708

- Swivel Spout
- Ceramic Disc Cartridge
- Flow Rate: 2.2 GPM
- All Metal Lever Handle Available
- CalGreen Low Flow Aerator and Low Lead Available

PC	$1090
PN	$1145
BN	$1310
UB/AB	$1735
CB/GB	$1960
PG/MG	$2345
PS/AS	$2460

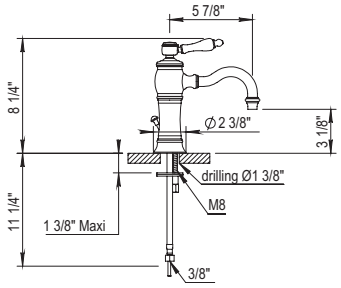

Emily Single Lever Basin Mixer

100.02.708

- Swivel Spout
- Ceramic Disc Cartridge
- Flow Rate: 2.2 GPM
- All Metal Lever Handle Available
- CalGreen Low Flow Aerator and Low Lead Available

PC	$1090
PN	$1145
BN	$1310
UB/AB	$1735
CB/GB	$1960
PG/MG	$2345
PS/AS	$2460

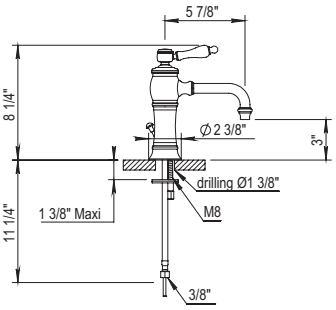

Emily Single Lever Vessel Mixer

100.01.703

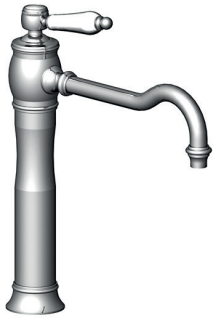

- Swivel Spout
- Ceramic Disc Cartridge
- Flow Rate: 2.2 GPM
- All Metal Lever Handle Available
- **Drain is Not Included**
- Lift And Turn Drain Available On Request HOP92.023 (p.91)
- CalGreen Low Flow Aerator and Low Lead Available

PC	$1165
PN	$1220
BN	$1355
UB/AB	$1645
CB/GB	$2040
PG/MG	$2250
PS/AS	$2345

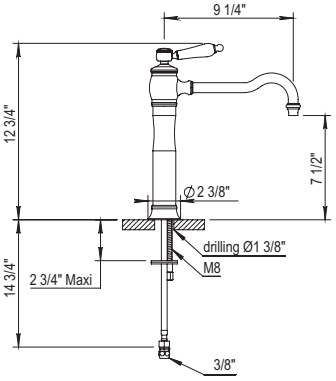

Emily Single Lever Vessel Mixer

100.02.703

- Swivel Spout
- Ceramic Disc Cartridge
- Flow Rate: 2.2 GPM
- All Metal Lever Handle Available
- **Drain is Not Included**
- Lift And Turn Drain Available On Request HOP92.023 (p.91)
- CalGreen Low Flow Aerator and Low Lead Available

PC	$1165
PN	$1220
BN	$1355
UB/AB	$1645
CB/GB	$2040
PG/MG	$2250
PS/AS	$2345

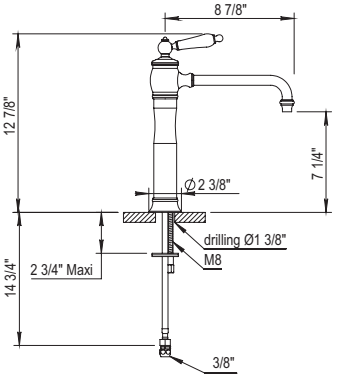

Saint Germain

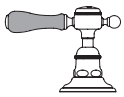
Metal Lever

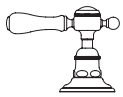
White Porcelain Lever

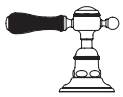
Black Porcelain Lever

Widespread Wallmount Mixer

100.02.263

- ¼-Turn Ceramic Disc
- Lift & Turn Drain HOP93.011
- Fixed Spout
- Flow Rate: 2.2 GPM
- CalGreen Low Flow Aerator Available
- Roughs Available: Ref 100.92.046BT & 100.92.048BT (Page 32)

À ENCASTRER
CONCEALED

Trim Only available: i.e. 100.02.262PN-**TO**
Deduct $320 from complete list for Trim only Pricing

Retail Price	
PC	$1230
PN	$1290
BN	$1380
UB/AB	$1795
CB/GB	$2085
PG/MG	$2295
PS/AS	$2415

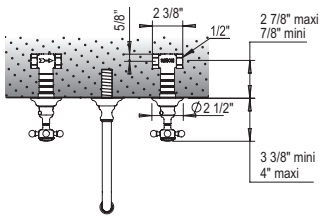

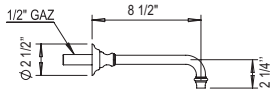

Single Hole Two-Handle Basin Mixer

102.66.208

- Swivel Spout
- ¼-Turn Ceramic Disc
- Flow Rate: 2.2 GPM
- CalGreen Low Flow Aerator and Low Lead Available

PC	$1370
PN	$1430
BN	$1535
UB/AB	$1890
CB/GB	$2325
PG/MG	$2570
PS/AS	$2675

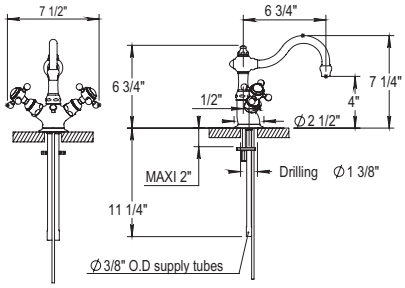

Basin Pillar Tap

102.66.231

160.67.231

161.67.231

162.67.231

- Fix Spout
- ¼-Turn Ceramic Disc
- No Aerator

PC	$445
PN	$475
BN	$520
UB/AB	$615
CB/GB	$755
PG/MG	$840
PS/AS	$875

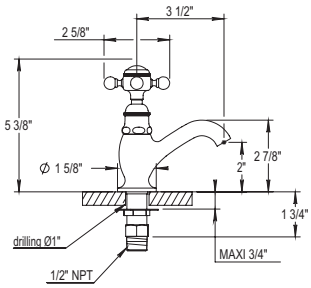

Single Hole Two-Handle Bidet Mixer

102.66.311

- Swivel Spout
- ¼-Turn Ceramic Disc
- 40º Rotating Aerator

PC	$1265
PN	$1320
BN	$1420
UB/AB	$1700
CB/GB	$2145
PG/MG	$2365
PS/AS	$2465

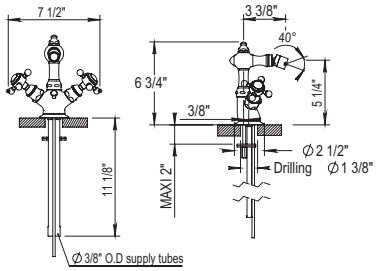

Exposed Wall Mounted Tub Filler with Handshower

102.66.434

160.67.434

161.67.434

162.67.434

ANTI-SCALE NOZZLES

- Fixed Spout
- ¼-Turn Ceramic Disc
- 59" Shower Hose
- Flow Rate: 11 GPM
- Vacuum Breaker Built Inside the Body
- All Metal Handle Available
- Anti-calcium Handshower

66.434: Middle handle Lever
67.434: Middle handle Cross

PC	$3475 ✓
PN	$3735 ✓
BN	$3865
UB/AB	$5115
CB/GB	$5815
PG/MG	$6925
PS/AS	$7255

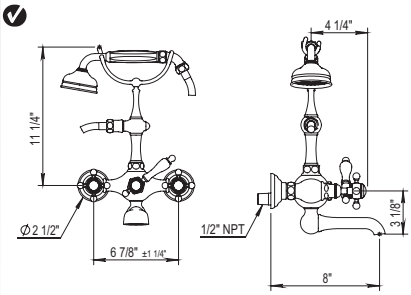

✓ **NOTE!** This check mark symbol indicates IN STOCK

Saint Germain

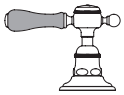
Metal Lever

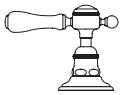
White Porcelain Lever

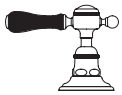
Black Porcelain Lever

Exposed Deck Mounted Tub Filler with Handshower

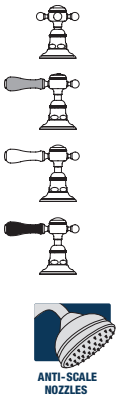

102.66.435

160.67.435

161.67.435

162.67.435

- Fixed Spout
- ¼-Turn Ceramic Disc
- 59" Shower Hose
- Excentrical Centers ± 1"
- Flow Rate: 11 GPM
- Vacuum Breaker Built Inside The Body
- All Metal Handle Available
- Anti-calcium Handshower

66.435: Middle handle Lever
67.435: Middle handle Cross

	Retail Price
PC	$3995 ✓
PN	$4225 ✓
BN	$4375
UB/AB	$6105
CB/GB	$6940
PG/MG	$8285
PS/AS	$8680

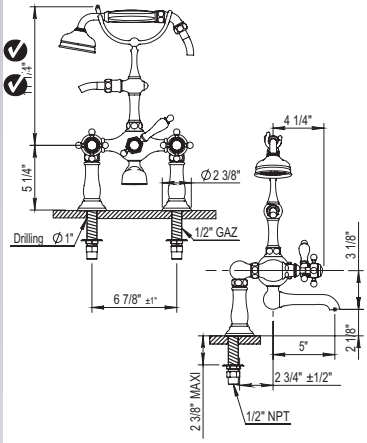

Exposed Floor Mounted Tub Filler with Handshower

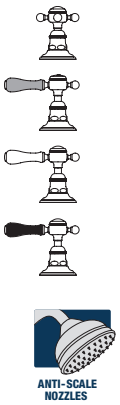

102.66.498

160.67.498

161.67.498

162.67.498

- Fixed Spout
- ¼-Turn Ceramic Disc
- 59" Shower Hose
- ¾" NPT Connections
- Flow Rate: 11 GPM
- Vacuum Breaker Built Inside The Body
- All Metal Handle Available
- Anti-calcium Handshower

PC	$4595 ✓
PN	$4720 ✓
BN	$5230
UB/AB	$6590
CB/GB	$7940
PG/MG	$8920
PS/AS	$9340

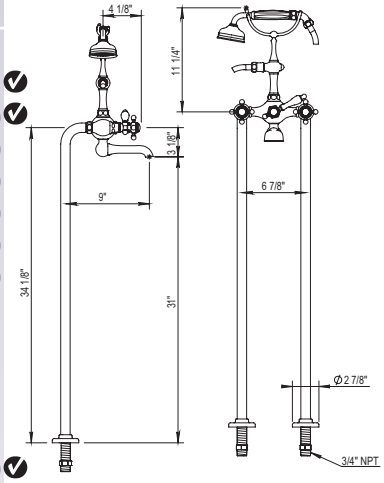

100.00.499

T-Connector for Floor Risers

- Drain Diameter: 1" min to 1 ½" max

Floor installed version on page 55

PC	$770 ✓
PN	$825 ✓
BN	$915
UB/AB	$1065
CB/GB	$1305
PG/MG	$1435
PS/AS	$1495

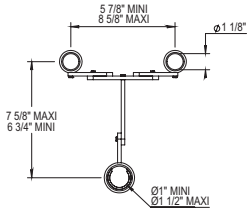

4-Hole Deck Tub Shower Set With Handshower

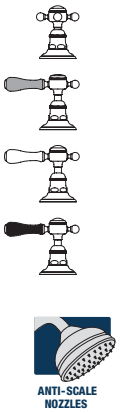

102.66.464

160.67.464

161.67.464

162.67.464

- ¾" ¼-Turn Ceramic Disc
- Fixed Spout with Integrated Diverter

- Retractable handshower with 79" Hose
- Flow Rate: 14 GPM
- All Metal Handle Available
- Anti-calcium Handshower

PC	$2500
PN	$2585
BN	$2740
UB/AB	$3450
CB/GB	$4250
PG/MG	$4685
PS/AS	$4905

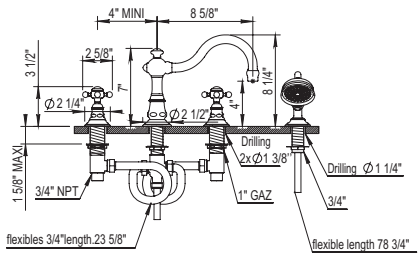

Saint Germain

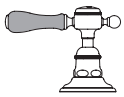
Metal Lever

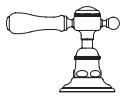
White Porcelain Lever

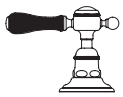
Black Porcelain Lever

3-Hole Deck Tub Shower Set

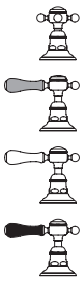

102.66.463

160.67.463

161.67.463

162.67.463

- Fixed Spout
- Includes T Connection
- Includes Hoses
- Flow Rate: 14 GPM
- ¼-Turn Ceramic Disc

Retail Price

PC	$1740
PN	$1785
BN	$1880
UB/AB	$2405
CB/GB	$2955
PG/MG	$3260
PS/AS	$3415

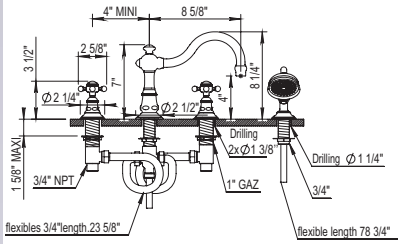

8” Tub Spout

102.07.471

- Solid Brass
- ¾” Female NPT Inlet

PC	$445
PN	$470
BN	$515
UB/AB	$615
CB/GB	$765
PG/MG	$845
PS/AS	$875

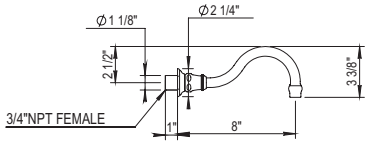

Exposed Thermostatic Valve with Tub Spout

160.67.754-10

161.67.754-10

162.67.754-10

NEW! Larger Showerhead Standard

- Two ¼-Turn Ceramic Disc Volume Control
- 10.6” Showerhead
- 60” Handshower Hose
- Integrated Diverter for Anti-calcium Handshower
- Includes Handshower, Hose and Wall Hook
- Flow Rate: 9 GPM
- All Metal Handle Available
- **Integrated Service Stops**
- Showerhead Restrictor Available Upon Request
- Option to change to 8’’ by ordering **160/161/162.67.754**
- Showerhead with 50° rotating ball joint

PC	$7925
PN	$8265
BN	$8725
UB/AB	$10,915
CB/GB	$13,130
PG/MG	$14,825
PS/AS	$15,445

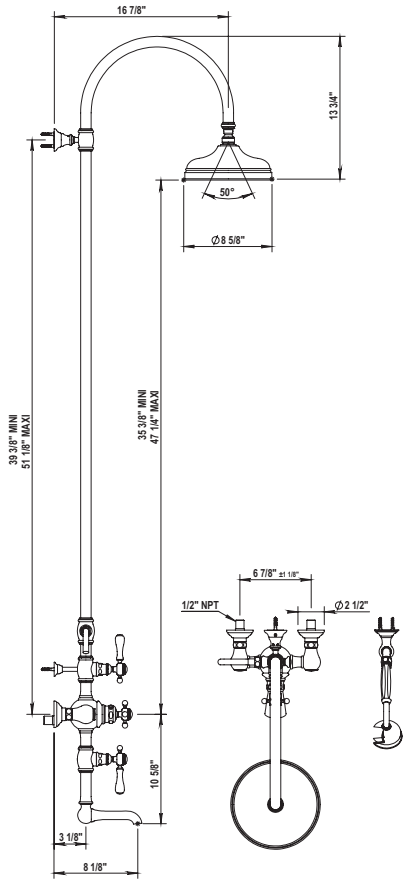

NOTE! This check mark symbol indicates IN STOCK

66 67 Saint Germain

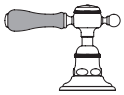
Metal Lever

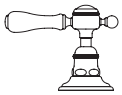
White Porcelain Lever

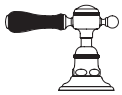
Black Porcelain Lever

Exposed Thermostatic Valve with Handshower

Retail Price

160.67.744-10

161.67.744-10

162.67.744-10

NEW! Larger Showerhead Standard

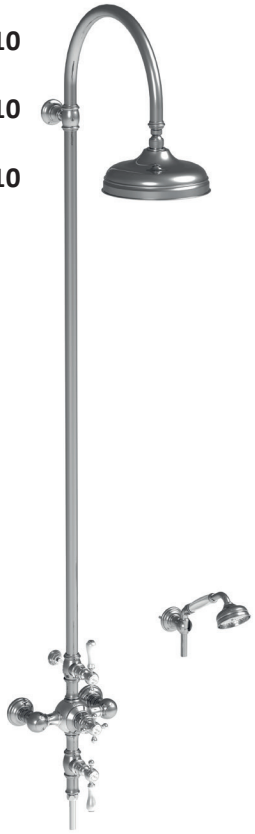

- Two ¼-Turn Ceramic Disc Volume Control
- 10.6” Showerhead
- 60” Handshower Hose
- Includes Anti-calcium Handshower, Hose and Wall Hook
- Flow Rate : 9 GPM
- All Metal Handle Available
- Integrated Service Stops
- Can Come Plugged Under Second Volume Control With Hand Shower And Hose Separate Upon Request
- Showerhead Restrictor Available Upon Request
- Option to change to 8’’ by ordering **160/161/162.67.744**
- Showerhead with 50° rotating ball joint

PC	$7220
PN	$7555
BN	$7945
UB/AB	$10250
CB/GB	$12,600
PG/MG	$13,900
PS/AS	$14,520

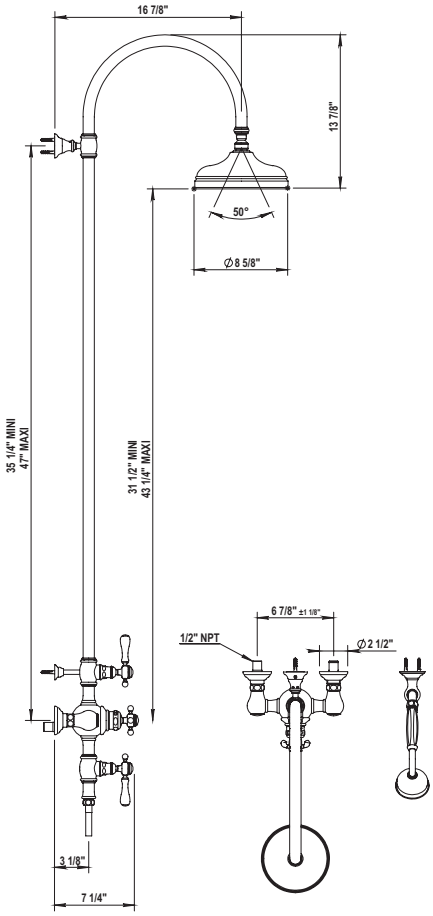

¾” Thermostatic Rough with Service Stops & Saint Germain Thermostatic Trim

100.92.524BT

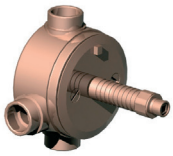

See page 29 for details

$2180

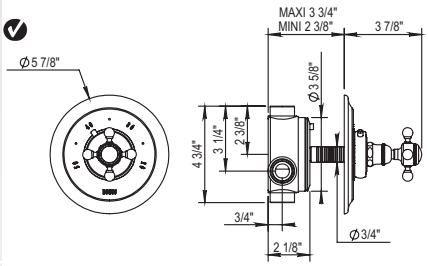

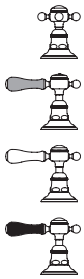

102.66.521

160.67.521

161.67.521

162.67.521

- Trim Plate for 100.92.524BT
- Solid Brass

PC	$995
PN	$1035
BN	$1060
UB/AB	$1365
CB/GB	$1700
PG/MG	$1880
PS/AS	$1950

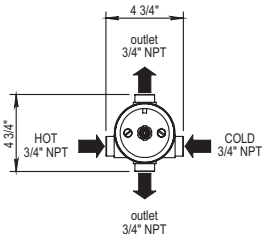

Saint Germain

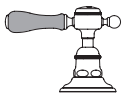
Metal Lever

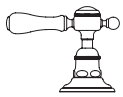
White Porcelain Lever

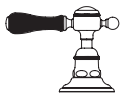
Black Porcelain Lever

¾” Thermostatic Rough with Integrated Diverter & Saint Germain Thermostatic Trim

		Retail Price
100.92.593BT	See page 30 for details	$1370 ✓

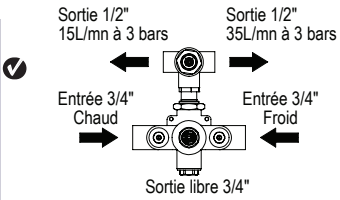

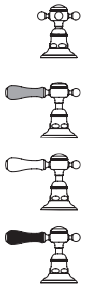

102.66.502
160.67.502
161.67.502
162.67.502

- Single Function 2 Way Diverter
- Trim Plate for 100.92.593BT
- Solid Brass
- Safety Stop @ 37 °C (99 Fahrenheit)

PC	$1430 ✓
PN	$1560 ✓
BN	$1815
UB/AB	$1985
CB/GB	$2430
PG/MG	$2675
PS/AS	$2805

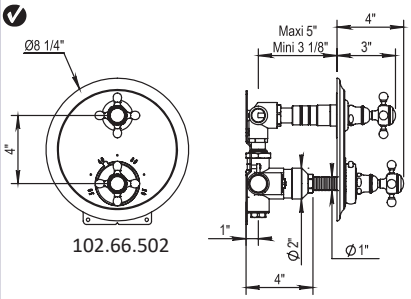

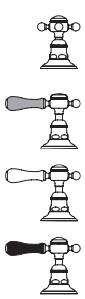

102.66.508
160.67.508
161.67.508
162.67.508

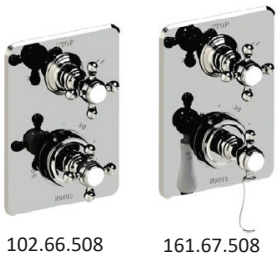

NEW!

Single Function 2 Way Diverter
- Trim Plate for 100.92.593BT
- Solid Brass
- Safety Stop @ 37 °C (99 Fahrenheit)

PC	$1375
PN	$1495
BN	$1730
UB/AB	$2035
CB/GB	$2335
PG/MG	$2780
PS/AS	$2920

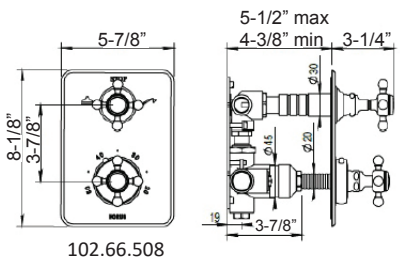

¾” Thermostatic Rough with Integrated Diverter & Saint Germain Thermostatic Trim

100.92.599BT	See page 30 for details	$1420 ✓

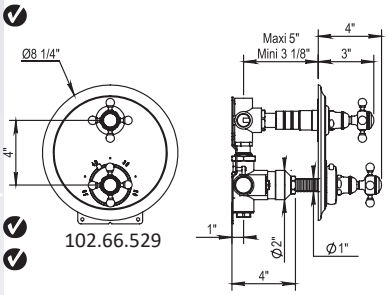

102.66.529

- Single Function 3 Way Diverter
- Trim Plate for 100.92.599BT
- Solid Brass
- Safety Stop @ 37 °C (99 Fahrenheit)

PC	$1445 ✓
PN	$1575 ✓
BN	$1840
UB/AB	$1985
CB/GB	$2460
PG/MG	$2730
PS/AS	$2835

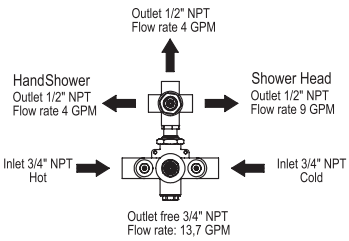

160.67.529
161.67.529
162.67.529

✓ **NOTE!** This check mark symbol indicates IN STOCK

Saint Germain

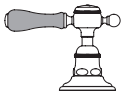
Metal Lever

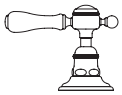
White Porcelain Lever

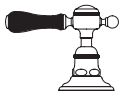
Black Porcelain Lever

¾” Thermostatic Rough with Service Stops & Saint Germain Thermostatic Trim

		Retail Price
102.92.591BT	See page 30 for details	$690 ✔
102.66.521 **160.67.521** **161.67.521** **162.67.521**	• Trim Plate for 102.92.591BT • Solid Brass	**PC** $995 ✔ **PN** $1035 ✔ **BN** $1060 **UB/AB** $1365 **CB/GB** $1700 **PG/MG** $1880 **PS/AS** $1950
102.66.507 **160.67.507** **161.67.507** **162.67.507**	• Trim Plate for 102.92.591BT • Solid Brass	**PC** $965 **PN** $995 **BN** $1060 **UB/AB** $1440 **CB/GB** $1645 **PG/MG** $1980 **PS/AS** $2050

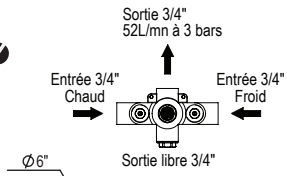

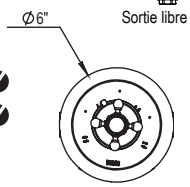

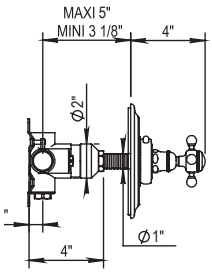

NEW!

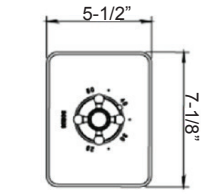

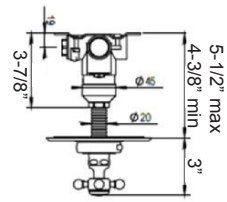

¾” Thermostatic Rough & Saint Germain Thermostatic Trim

100.92.597BT	See page 31 for details	$1580 ✔
160.67.527 **161.67.527** **162.67.527**	• Trim Plate for 100.92.597BT • Solid Brass • Volume Controls Must Be Cross Handles • Plate is Reversible	**PC** $1640 ✔ **PN** $1730 ✔ **BN** $1765 **UB/AB** $2260 **CB/GB** $2790 **PG/MG** $3085 **PS/AS** $3220

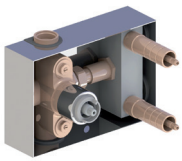

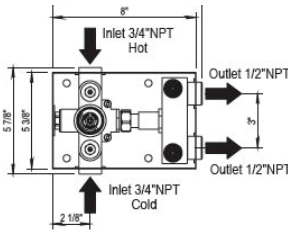

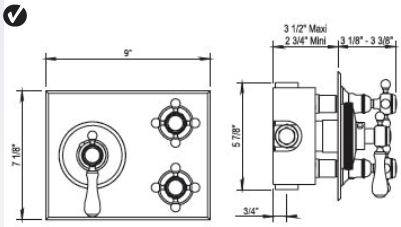

Saint Germain

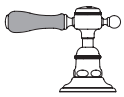
Metal Lever

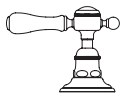
White Porcelain Lever

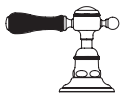
Black Porcelain Lever

Saint Germain Volume Control Trim Only

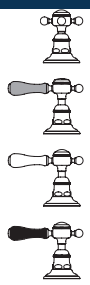

102.66.578

160.67.578

161.67.578

162.67.578

- Trim for ½" or ¾" Volume Control Roughs
- Trim for in Wall Diverters

	Retail Price
PC	$320 ✓
PN	$345 ✓
BN	$370
UB/AB	$440
CB/GB	$550
PG/MG	$605
PS/AS	$645

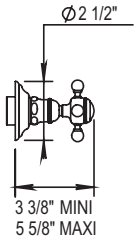

Matching Roughs

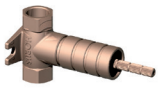

½" Volume Control, closing clockwise **100.92.046BT** $160 ✓

½" Volume Control, closing counter clockwise **100.92.048BT** $160 ✓

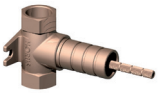

¾" Volume Control, closing clockwise **100.92.047BT** $180 ✓

¾" Volume Control, closing counter clockwise **100.92.049BT** $180 ✓

See page 32 for full details

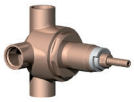

½" Two way in wall diverter; no shared ports **100.92.030BT** $475 ✓

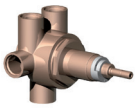

½" Three way in wall diverter; no shared ports **100.92.090BT** $530 ✓

Vintage Handshower and Fixed Handshower Holder

100.01.589

- Wall Union
- 59" Metal Hose
- Fixed Handshower Holder
- Flow Rate : 2.2 GPM
- Cal Green Low Flow Aerator Available
- All Metal Handle Available
- Anti-calcium handshower

PC	$765
PN	$810 ✓
BN	$875
UB/AB	$1025
CB/GB	$1330
PG/MG	$1470
PS/AS	$1540

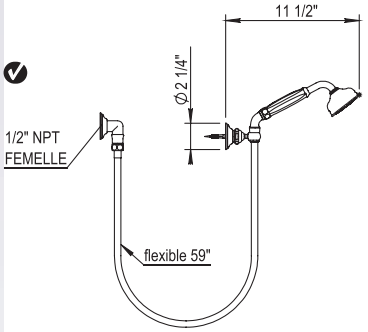

Vintage Handshower and Sliding Wall Bar Set

100.01.532

- Wall Union
- 59" Metal Hose
- Swiveling Handshower Holder
- 23 5/8" Sliding Wall Bar
- Cal Green Low Flow Aerator Available
- All Metal Handle Available
- Anti-calcium Handshower

PC	$1230 ✓
PN	$1240 ✓
BN	$1340
UB/AB	$1700
CB/GB	$2090
PG/MG	$2305
PS/AS	$2415

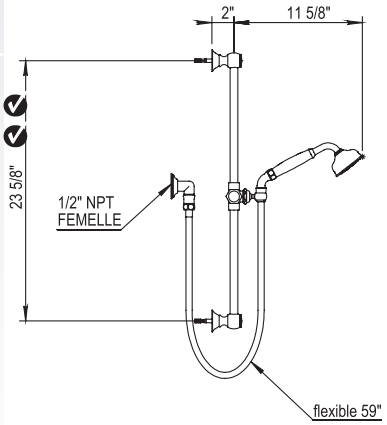

✓ **NOTE!** This check mark symbol indicates IN STOCK

Saint Germain

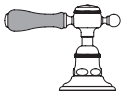
Metal Lever

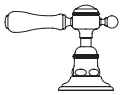
White Porcelain Lever

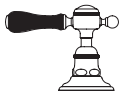
Black Porcelain Lever

Montmartre Glass Shelf

102.07.603

- Solid Brass
- Glass Shelf
- Mounting Hardware Included

Retail Price

PC	$710
PN	$815
BN	$995
UB/AB	$980
CB/GB	$1210
PG/MG	$1335
PS/AS	$1390

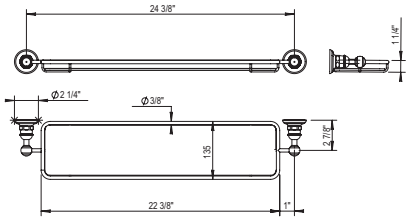

Montmartre Tumbler Set

102.07.604

- Solid Brass
- Porcelain Tumbler
- Mounting Hardware Included

PC	$280
PN	$330
BN	$400
UB/AB	$395
CB/GB	$490
PG/MG	$540
PS/AS	$565

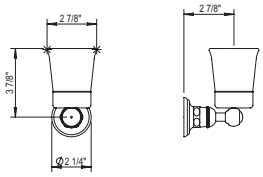

Montmartre Soap Dish Set

102.07.605

- Solid Brass
- Porcelain Soap Dish
- Mounting Hardware Included

PC	$275
PN	$310
BN	$375
UB/AB	$405
CB/GB	$460
PG/MG	$510
PS/AS	$535

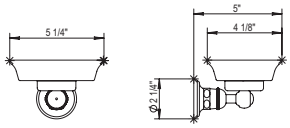

Montmartre Soap Basket

102.07.606

- Solid Brass
- Mounting Hardware Included

PC	$550
PN	$630
BN	$770
UB/AB	$820
CB/GB	$930
PG/MG	$1025
PS/AS	$1075

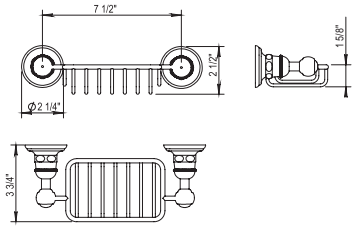

Montmartre Soap / Sponge Basket

102.07.607

- Solid Brass
- Mounting Hardware Included

PC	$680
PN	$785
BN	$950
UB/AB	$920
CB/GB	$1160
PG/MG	$1275
PS/AS	$1335

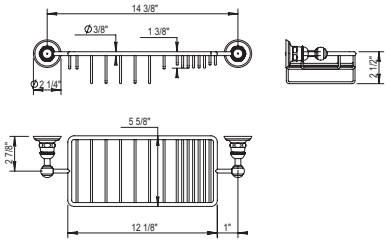

Montmartre Towel Ring

102.07.609

- Solid Brass
- Mounting Hardware Included

PC	$285 ✔
PN	$325 ✔
BN	$395
UB/AB	$400
CB/GB	$490
PG/MG	$540
PS/AS	$565

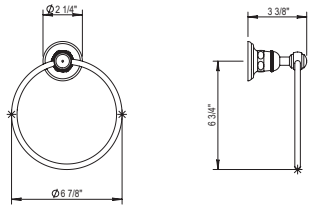

Saint Germain

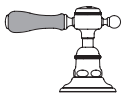
Metal Lever

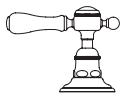
White Porcelain Lever

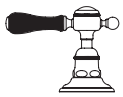
Black Porcelain Lever

Montmartre 24” Towel Rail

102.07.611

- Solid Brass
- Mounting Hardware Included
- Can Be Cut To Size

	Retail Price
PC	$420 ✓
PN	$485 ✓
BN	$590
UB/AB	$585
CB/GB	$720
PG/MG	$795
PS/AS	$820

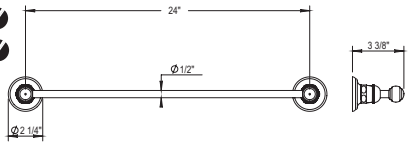

Montmartre 24” Double Towel Rail

102.07.620

- Solid Brass
- Mounting Hardware Included
- Can Be Cut To Size

PC	$665
PN	$785
BN	$950
UB/AB	$1005
CB/GB	$1160
PG/MG	$1275
PS/AS	$1335

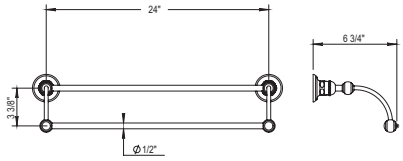

Montmartre Single Robe Hook

102.07.613

- Solid Brass
- Mounting Hardware Included

PC	$390 ✓
PN	$450 ✓
BN	$545
UB/AB	$585
CB/GB	$665
PG/MG	$795
PS/AS	$820

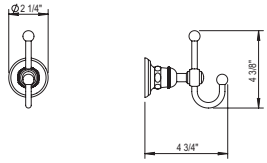

Montmartre Double Robe Hook

102.07.614

- Solid Brass
- Mounting Hardware Included

PC	$315 ✓
PN	$365 ✓
BN	$430
UB/AB	$440
CB/GB	$540
PG/MG	$595
PS/AS	$615

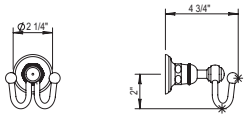

Montmartre Double Posted Toilet Paper Holder

102.07.617

- Solid Brass
- Mounting Hardware Included

PC	$455 ✓
PN	$520 ✓
BN	$635
UB/AB	$615
CB/GB	$770
PG/MG	$850
PS/AS	$890

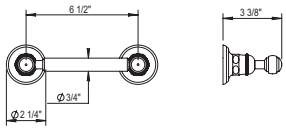

Montmartre Single Posted Toilet Paper Holder

102.07.618

- Solid Brass
- Mounting Hardware Included

PC	$245 ✓
PN	$280 ✓
BN	$340
UB/AB	$360
CB/GB	$410
PG/MG	$455
PS/AS	$475

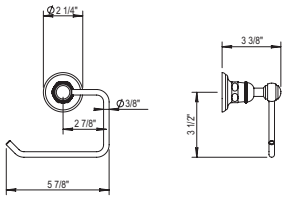

Montmartre Toilet Brush Set

102.07.619

- Solid Brass
- Wall Hung
- Mounting Hardware Included

PC	$410
PN	$470
BN	$570
UB/AB	$615
CB/GB	$695
PG/MG	$765
PS/AS	$805

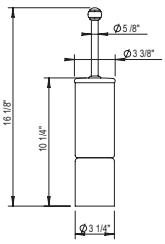

Ascott

62 | 65 Ascott

3-Hole Basin Mixer High Spout

102.62.261

102.65.261

- Fixed Spout
- ¼-Turn Ceramic Disc
- Flow Rate: 2.2 GPM
- CalGreen Low Flow Aerator Upon Request

	Retail Price
PC	$1550 ✓
PN	$1610 ✓
BN	$1695
UB/AB	$2140
CB/GB	$2635
PG/MG	$2910
PS/AS	$3040

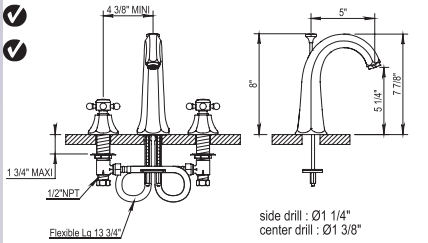

3-Hole Basin Mixer Low Spout

102.62.260

100.35.260

- Fixed Spout
- ¼-Turn Ceramic Disc
- Flow Rate: 2.2 GPM
- CalGreen Low Flow Aerator Upon Request

PC	$1515
PN	$1580
BN	$1695
UB/AB	$2095
CB/GB	$2580
PG/MG	$2895
PS/AS	$2995

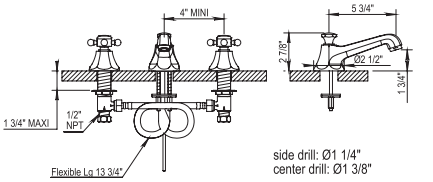

Single Hole Basin Mixer High Spout

102.65.708

- Fixed Spout
- ¼-Turn Ceramic Disc
- Flow Rate: 2.2 GPM
- CalGreen Low Flow Aerator Upon Request

PC	$1120
PN	$1175 ✓
BN	$1235
UB/AB	$1540
CB/GB	$1870
PG/MG	$2055
PS/AS	$2160

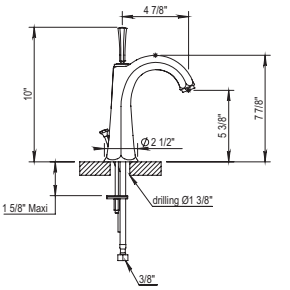

Exposed Wall Mounted Tub Filler with Handshower

102.62.434

102.65.434

ANTI-SCALE NOZZLES

- Fixed Spout
- ¼-Turn Ceramic Disc
- Excentrical centers ± **1 ¼"**
- 59" Shower Hose
- Flow Rate: 11 GPM
- Vacuum Breaker Built Inside the Body
- All Metal Handle Available
- Anti-calcium Handshower

62.434: Middle handle Lever
65.434: Middle handle Cross

PC	$2620
PN	$2745
BN	$2825
UB/AB	$3725
CB/GB	$4225
PG/MG	$5055
PS/AS	$5275

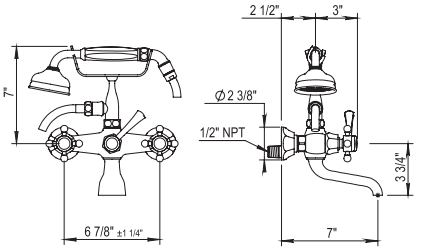

✓ **NOTE!** This check mark symbol indicates IN STOCK

62 | 65 Ascott

Exposed Deck Mounted Tub Filler with Handshower

102.62.435

102.65.435

ANTI-SCALE NOZZLES

- Fixed Spout
- ¼-Turn Ceramic Disc
- Flow Rate: 11 GPM
- Vacuum Breaker Built Inside the Body
- All Metal Handle Available
- Anti-calcium Handshower

62.435: Middle handle Lever
65.435: Middle handle Cross

Retail Price	
PC	$2985
PN	$3115
BN	$3295
UB/AB	$4495
CB/GB	$5095
PG/MG	$6095
PS/AS	$6365

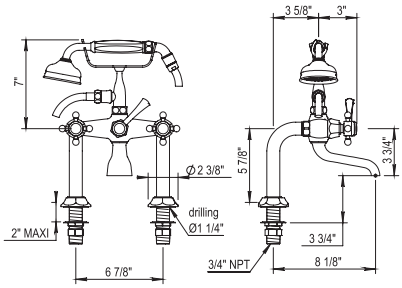

Exposed Floor Mounted Tub Filler with Handshower

102.62.498

102.65.498

ANTI-SCALE NOZZLES

- Fixed Spout
- ¼-Turn Ceramic Disc
- 59" Shower Hose
- ¾'' NPT Connections
- Flow Rate: 11 GPM
- Vacuum Breaker Built Inside the Body
- All Metal Handle Available
- Anti-calcium Handshower

PC	$3430
PN	$3560
BN	$3685
UB/AB	$5015
CB/GB	$5695
PG/MG	$6815
PS/AS	$7125

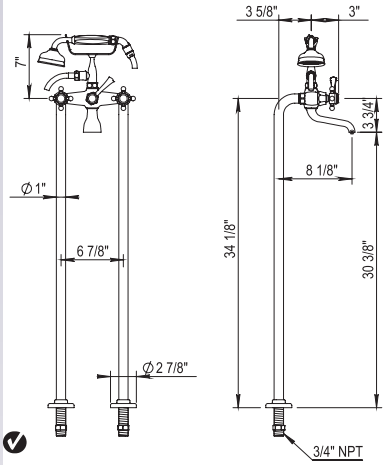

T-Connector for Floor Risers

100.00.499

- Drain Diameter: 1" min to 1 ½" max

Floor installed version on page 55

PC	$770 ✔
PN	$825 ✔
BN	$915
UB/AB	$1065
CB/GB	$1305
PG/MG	$1435
PS/AS	$1495

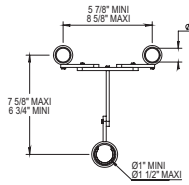

4-Hole Deck Tub & Shower Set

102.62.464

102.35.464

ANTI-SCALE NOZZLES

- ¼-Turn Ceramic Disc
- Fixed Spout with Integrated Diverter
- Retractable Handshower with 79" Hose
- Flow Rate: 14 GPM
- All Metal Handle Available
- Anti-calcium Handshower

PC	$2465
PN	$2560
BN	$2740
UB/AB	$3585
CB/GB	$4065
PG/MG	$4870
PS/AS	$5085

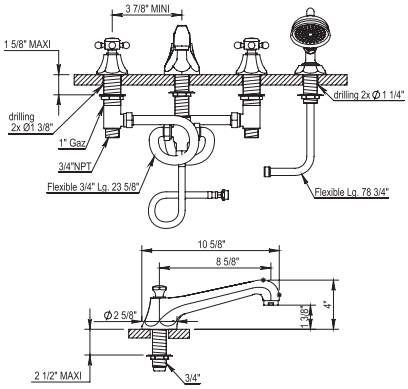

8" Tub Spout

102.20.471

- Solid Brass
- ¾" Female NPT

PC	$950
PN	$985
BN	$1050
UB/AB	$1395
CB/GB	$1595
PG/MG	$1895
PS/AS	$1995

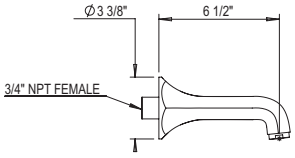

62 | 65 Ascott

Exposed Thermostatic Valve with Handshower

Retail Price

102.65.745-10

NEW! Larger Showerhead standard

ANTI-SCALE NOZZLES

- 10.6” Showerhead
- 60” Handshower Hose
- Includes Anti-calcium Handshower, Hose and Wall Hook
- Flow Rate: 9 GPM
- All Metal Handle Available
- Can Come Plugged Under Second Volume Control With Hand Shower And Hose Separate upon request
- Showerhead Restrictor Available Upon Request
- Option to change to 8’’ Showerhead by ordering **102.65.745**
- Showerhead with 50° rotating ball joint

PC	$5350
PN	$5885
BN	$6150
UB/AB	$7995
CB/GB	$9095
PG/MG	$10895
PS/AS	$11295

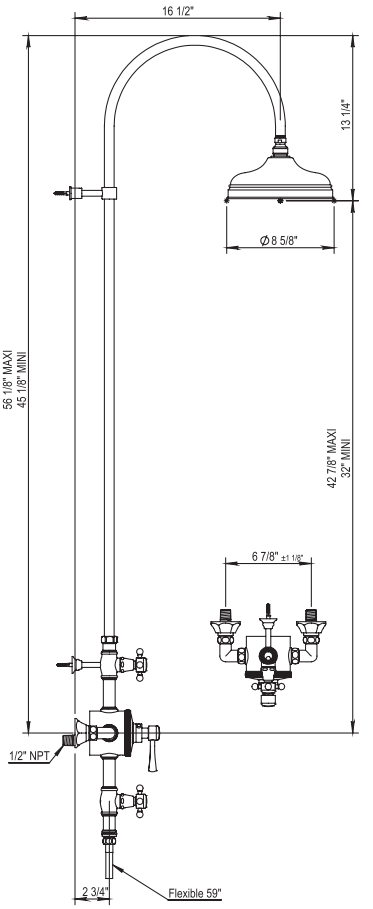

¾” Thermostatic Rough & Ascott Thermostatic Trim

102.92.524BT

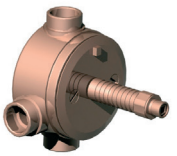

- ¾” NPT Inlets
- ¾” NPT Outlets
- Safety Stop @ 37 °C (99 Fahrenheit)
- 20 GPM @ 45 PSI
- 1 Outlet Plug Supplied
- No Service Stops

$2180

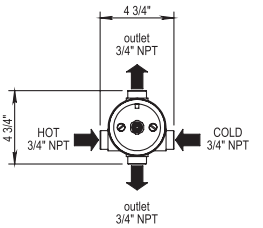

102.62.521

102.65.521

- Trim Plate for 102.92.524BT
- Solid Brass

PC	$1050
PN	$1100 ✔
BN	$1155
UB/AB	$1435
CB/GB	$1785
PG/MG	$1950
PS/AS	$2055

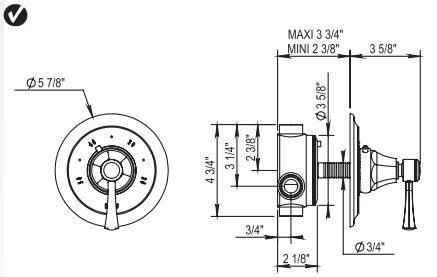

✔ **NOTE!** This check mark symbol indicates IN STOCK

62 | 65 Ascott

¾” Thermostatic Rough with Service Stops & Ascott Thermostatic Trim

100.92.591BT

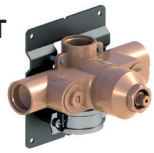

- ¾” NPT Inlets
- ¾” NPT Outlets
- Safety Stop @ 37 °C (99 Fahrenheit)
- 14 GPM @ 45 PSI
- 1 Outlet Plug Supplied
- Integrated Service Stops

Retail Price

$690

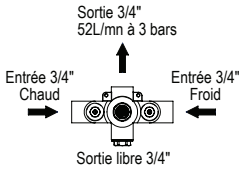

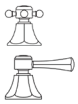

102.62.521

102.65.521

- Trim Plate for 100.92.591BT
- Solid Brass

PC	$1050
PN	$1100
BN	$1155
UB/AB	$1435
CB/GB	$1785
PG/MG	$1950
PS/AS	$2055

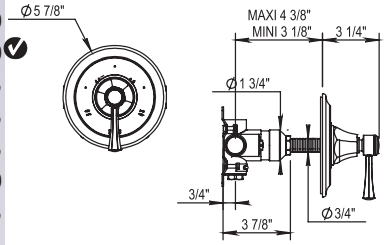

¾” Thermostatic Rough & Ascott Thermostatic Trim

100.92.593BT

- ¾” NPT Inlets
- ¾” NPT Outlets
- Safety Stops @ 37 °C (99 Fahrenheit)
- 14 GPM @ 45 PSI
- 1 Outlet Plug Supplied
- Single Function 2 Way Diverter
- Integrated Service Stops

$1370

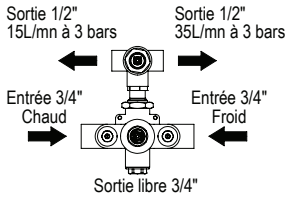

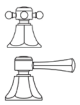

102.62.523

102.65.523

62.523 is lever on bottom, and cross on top
65.523 has 2 levers

- Single Function 2 Way Diverter
- Trim Plate for 100.92.593BT
- Solid Brass
- Safety Stop @ 37 °C (99 Fahrenheit)

PC	$1355
PN	$1505
BN	$1540
UB/AB	$1595
CB/GB	$2435
PG/MG	$2675
PS/AS	$2805

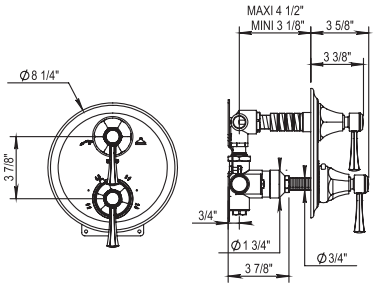

¾” Thermostatic Rough with Integrated Diverter & Ascott Thermostatic Trim

100.92.599BT

- ¾” NPT Inlets
- ¾” NPT Outlets
- Safety Stops @ 37 °C (99 Fahrenheit)
- 14 GPM @ 45 PSI
- 1 Outlet Plug Supplied
- Single Function 3 Way Diverter
- Integrated Service Stops

$1420

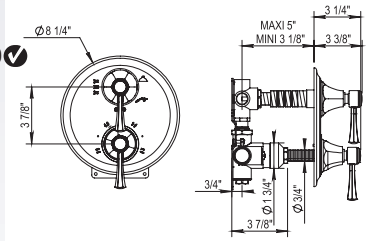

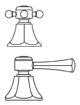

102.62.529

102.65.529

62.529 is lever on bottom, and cross on top
65.529 has 2 levers

- Single Function 3 Way Diverter
- Trim Plate for 100.92.599BT
- Solid Brass
- Safety Stop @ 37 °C (99 Fahrenheit)

PC	$1385
PN	$1505
BN	$1700
UB/AB	$2005
CB/GB	$2460
PG/MG	$2720
PS/AS	$2835

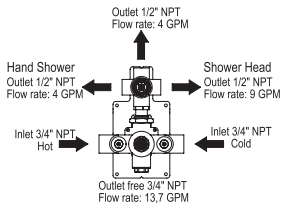

62 | 65 Ascott

¾” Thermostatic Rough & Ascott Thermostatic Trim

100.92.597BT

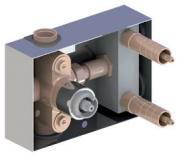

102.65.527

- ¾” NPT Inlets
- 2 x ½” NPT Outlets
- 14 GPM @ 45 PSI
- 1 Outlet Plug Supplied
- Integrated Service Stops for Each Outlet

- Trim Plate for 100.92.597BT
- Solid Brass
- Plate is Reversible

Retail Price

	$1580 ✓
PC	$1540 ✓
PN	$1620 ✓
BN	$1765
UB/AB	$2215
CB/GB	$2730
PG/MG	$3020
PS/AS	$3085

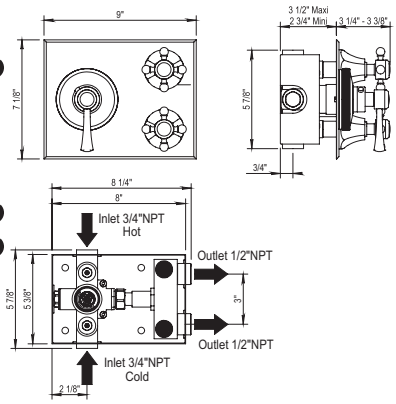

¾” Thermostatic Rough & Ascott Thermostatic Trim

100.92.583BT

102.65.519

- ¾” NPT Inlets
- 3 x ½” NPT Outlets
- 14 GPM @ 45 PSI
- 1 Outlet Plug Supplied
- Integrated Service Stops for Each Outlet

- Trim Plate for 100.92.583BT
- Solid Brass
- Plate is Reversible

	$2040
PC	$2050
PN	$2360
BN	$2860
UB/AB	$2960
CB/GB	$3645
PG/MG	$4010
PS/AS	$4210

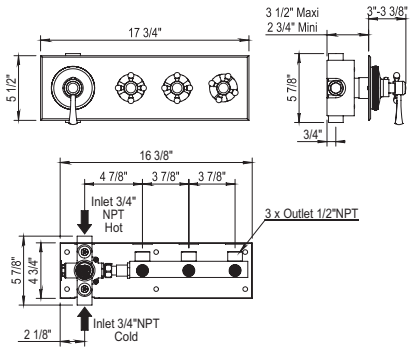

¾” Thermostatic Rough & Ascott Thermostatic Trim

100.92.584BT

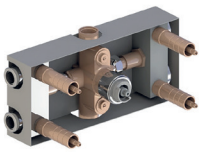

102.65.520

- ¾” NPT Inlets
- 4 x ½” NPT Outlets
- 14 GPM @ 45 PSI
- 1 Outlet Plug Supplied
- Integrated Service Stops for Each Outlet

- Trim Plate for 100.92.584BT
- Solid Brass
- Plate is Reversible

	$2325
PC	$2365
PN	$2720
BN	$3455
UB/AB	$3420
CB/GB	$4195
PG/MG	$4630
PS/AS	$4835

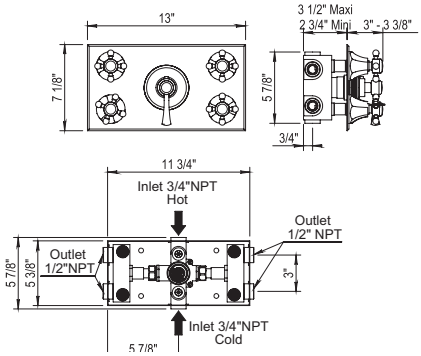

✓ **NOTE!** This check mark symbol indicates IN STOCK

62 | 65 Ascott

Ascott Volume Control Trim Only

		Retail Price	
102.62.578 102.35.578	• Trim for ½" or ¾" Volume Control Roughs • Trim for in Wall Diverters	PC $390 PN $410 BN $435 UB/AB $560 CB/GB $690 PG/MG $760 PS/AS $795	✓

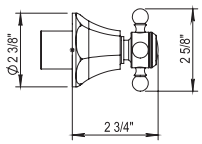

½" Volume Control Rough - Closing clockwise

100.92.046BT	• Unfinished Brass • ¼-Turn Ceramic Disc • Flow Rate: 12 GPM @ 45 PSI • Must Order Volume Control Trim	$160	✓

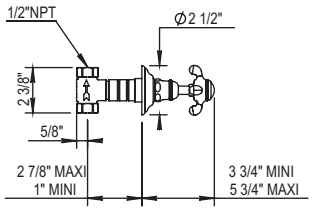

½" Volume Control Rough - Closing counterclockwise

100.92.048BT	• Unfinished Brass • ¼-Turn Ceramic Disc • Flow Rate: 12 GPM @ 45 PSI • Must Order Volume Control Trim	$160	✓

¾" Volume Control Rough - Closing clockwise

100.92.047BT	• Unfinished Brass • ¼-Turn Ceramic Disc • Flow Rate: 16 GPM @ 45 PSI • Must Order Volume Control Trim	$180	✓

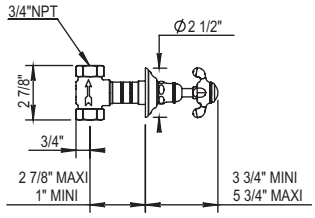

¾" Volume Control Rough - Closing counterclockwise

100.92.049BT	• Unfinished Brass • ¼-Turn Ceramic Disc • Flow Rate: 16 GPM @ 45 PSI • Must Order Volume Control Trim	$180	✓

½" Two way in wall diverter with no shared ports

100.92.030BT	• 4 Way Concealed diverter • 2 Inlets / 2 Outlets • Must Order Volume Control Trim	$475	✓

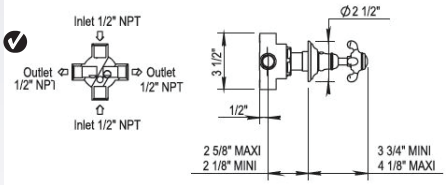

½" Three way in wall diverter with no shared ports

100.92.090BT	• 5 Way Concealed Diverter • 2 Inlets / 3 Outlets • Must Order Volume Control Trim	$530	✓

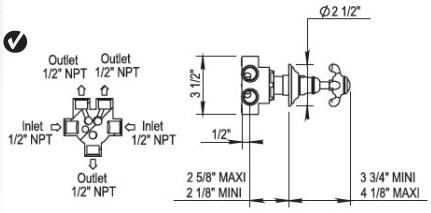

62 | 65 Ascott

Vintage Handshower & Fixed Handshower Holder

102.62.589

- Wall Union
- 59” Metal Hose
- Fixed Handshower Holder
- All Metal Handle Available
- Anti-calcium Handshower

Retail Price

PC	$730
PN	$775
BN	$800
UB/AB	$1015
CB/GB	$1245
PG/MG	$1375
PS/AS	$1435

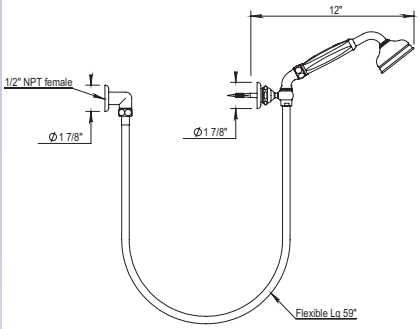

Vintage Handshower and Sliding Wall Bar Set

102.62.532

- Wall Union
- 59” Metal Hose
- Swiveling Handshower Holder
- 23 $^{5}/_{8}$” Sliding Wall Bar
- All Metal Handle Available
- Anti-calcium Handshower

PC	$1290 ✓
PN	$1355 ✓
BN	$1425
UB/AB	$1785
CB/GB	$2195
PG/MG	$2320
PS/AS	$2420

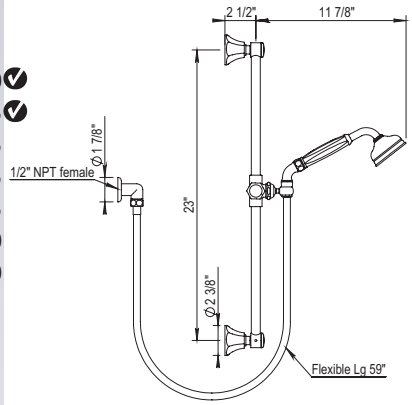

Ascott Hooded Toilet Paper Holder

102.32.617

- Solid Brass
- Mounting Hardware Included

PC	$480
PN	$505
BN	$535
UB/AB	$660
CB/GB	$815
PG/MG	$900
PS/AS	$940

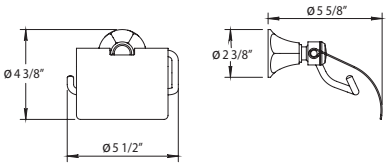

Ascott Spare Toilet Paper Holder

102.32.618

- Solid Brass
- Mounting Hardware Included

PC	$525
PN	$555
BN	$590
UB/AB	$715
CB/GB	$875
PG/MG	$980
PS/AS	$1025

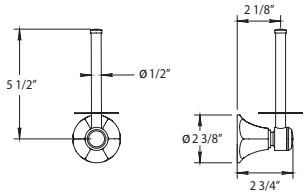

Ascott Toilet Brush Set

102.32.619

- Solid Brass
- Wall Hung
- Mounting Hardware Included

PC	$480
PN	$505
BN	$535
UB/AB	$660
CB/GB	$815
PG/MG	$900
PS/AS	$940

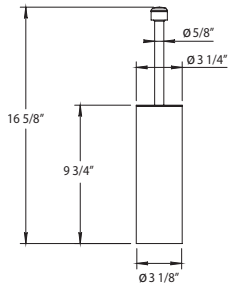

✓ **NOTE!** This check mark symbol indicates IN STOCK

32 Accessories

Ascott Tumbler Set

102.32.604

- Solid Brass
- Porcelain Tumbler
- Mounting Hardware Included

	Retail Price
PC	$440
PN	$460
BN	$485
UB/AB	$619
CB/GB	$745
PG/MG	$825
PS / AS	$895

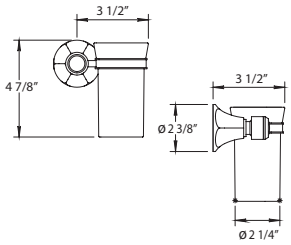

Ascott Soap Dish Set

102.32.605

- Solid Brass
- Porcelain Soap Dish
- Mounting Hardware Included

PC	$435
PN	$455
BN	$490
UB/AB	$625
CB/GB	$740
PG/MG	$825
PS / AS	$875

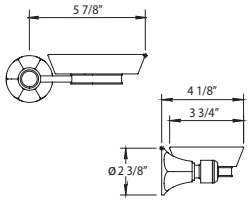

Ascott Soap Basket

102.32.606

- Solid Brass
- Porcelain Soap Dish
- Mounting Hardware Included

PC	$840
PN	$865
BN	$890
UB/AB	$1275
CB/GB	$1430
PG/MG	$1575
PS / AS	$1635

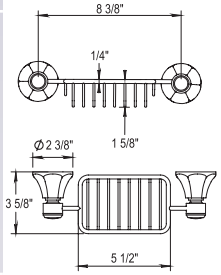

Ascott Soap Basket

102.32.607

- Solid Brass
- Mounting Hardware Included

PC	$960
PN	$1010
BN	$1075
UB/AB	$1285
CB/GB	$1630
PG/MG	$1795
PS / AS	$1875

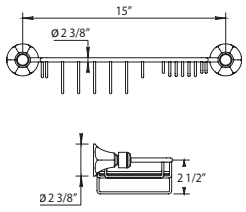

Ascott Towel Ring

102.32.609

- Solid Brass
- Mounting Hardware Included

PC	$425
PN	$435
BN	$480
UB/AB	$645
CB/GB	$730
PG/MG	$805
PS / AS	$840

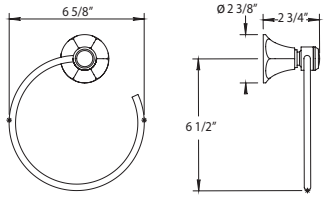

Ascott Single Robe Hook

102.32.613

- Solid Brass
- Mounting Hardware Included

PC	$360
PN	$375
BN	$395
UB/AB	$495
CB/GB	$610
PG/MG	$670
PS / AS	$705

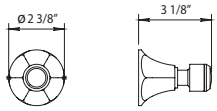

Ascott 24" Towel Rail

102.32.611

- Solid Brass
- Mounting Hardware Included
- Cannot be cut to size

PC	$840
PN	$885
BN	$945
UB/AB	$1230
CB/GB	$1430
PG/MG	$1570
PS / AS	$1645

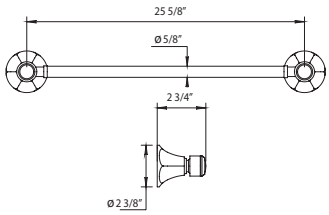

Anthea

Only available in Canada

06 | 10 Anthea Only Available in Canada

3-Hole Basin Mixer

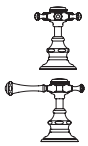

100.06.260

100.10.260

ECO 8L / mn

- Swivel Spout
- ¼-Turn Ceramic Disc
- Flow Rate: 2.2 GPM

	Retail Price
PC	$1935
PN	$2025
BN	$2185
UB/AB	$3000
CB/GB	$3290
PG/MG	$3365
PS/AS	$3750

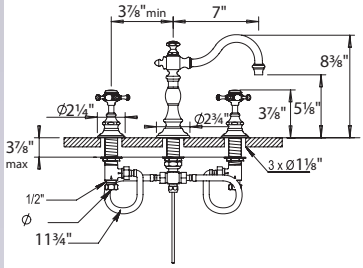

3-Hole Wall Mounted Basin Mixer

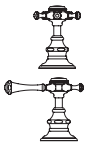

100.06.262

100.10.262

ECO 8L / mn

- Swivel Spout
- ¼-Turn Ceramic Disc
- Lift & Turn Drain HOP93.011
- Flow Rate: 2.2 GPM
- Roughs Available: 100.92.046BT & 100.92.048BT **(Page 32)**

Trim Only available: i.e. 100.06.262PN-**TO**
Deduct $320 from complete list for Trim only Pricing

PC	$1815
PN	$1910
BN	$2060
UB/AB	$2795
CB/GB	$3095
PG/MG	$3135
PS/AS	$3530

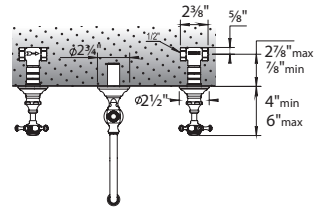

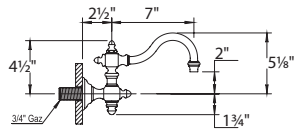

Single Lever Basin Mixer

100.06.208

ECO 8L / mn

- Swivel Spout
- ¼-Turn Ceramic Disc
- Lift & Turn Drain HOP93.011
- Flow Rate: 2.2 GPM
- CalGreen Low Flow Aerator and Low Lead Available

PC	$1680
PN	$1765
BN	$1920
UB/AB	$2600
CB/GB	$2850
PG/MG	$3210
PS/AS	$3360

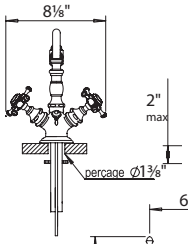

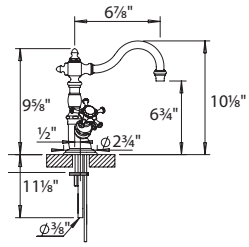

Single Hole Two Handle Bidet Mixer

100.06.311

- Swivel Spout
- ¼-Turn Ceramic Disc
- 40º Rotating Aerator

PC	$1460
PN	$1550
BN	$1700
UB/AB	$2060
CB/GB	$2495
PG/MG	$2800
PS/AS	$2930

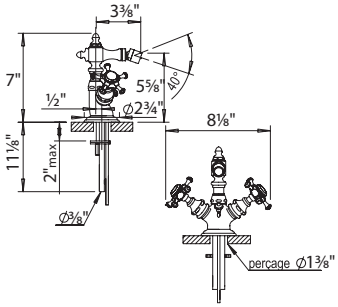

Exposed Wall Mounted Tub Filler with Handshower

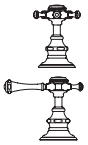

100.06.434

100.10.434

PICOTS ANTICALCAIRES
ANTI-SCALE NOZZLES

- Fixed Spout
- ¼-Turn Ceramic Disc
- 59" Shower Hose
- Flow Rate: 11 GPM
- Vacuum Breaker Built Inside the Body
- Anti-calcium Handshower

06.434: Middle handle Lever
10.434: Middle handle Cross

PC	$3780
PN	$3960
BN	$4270
UB/AB	$5330
CB/GB	$6430
PG/MG	$7230
PS/AS	$7560

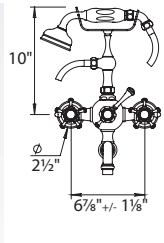

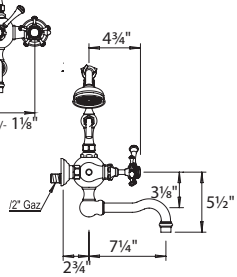

06 | 10 Anthea Only Available in Canada

Exposed Deck Mounted Tub Filler with Handshower

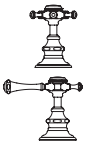

100.06.435

100.10.435

- Fixed Spout
- ¼-Turn Ceramic Disc
- 59” Shower Hose
- Flow Rate: 11 GPM
- Vacuum Breaker Built Inside the Body
- Anti-calcium Handshower

06.435: Middle handle Lever
10.435: Middle handle Cross

	Retail Price
PC	$4435
PN	$4630
BN	$4975
UB/AB	$6875
CB/GB	$7530
PG/MG	$8480
PS/AS	$8865

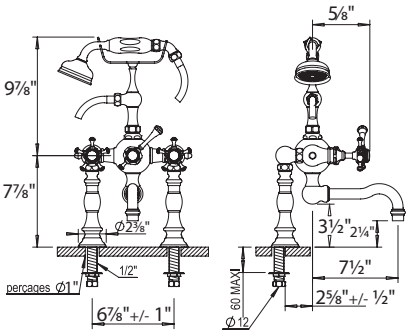

Exposed Floor Mounted Tub Filler with Handshower

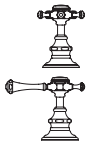

100.06.498

100.10.498

- Fixed Spout
- ¼-Turn Ceramic Disc
- 59” Shower Hose
- ¾” NPT Connections
- Flow Rate: 11 GPM
- Vacuum Breaker Built Inside The Body
- All Metal Handle Available
- Anti-calcium Handshower

PC	$4615
PN	$4850
BN	$5310
UB/AB	$7160
CB/GB	$7845
PG/MG	$8830
PS/AS	$9235

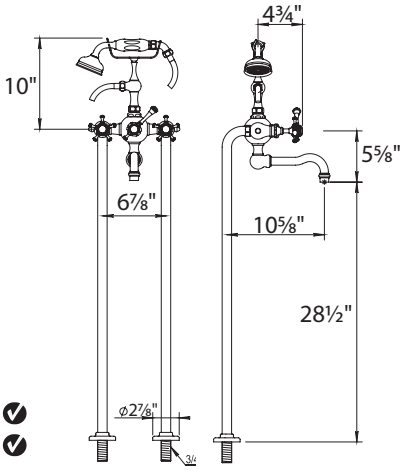

100.00.499

T-Connector for Floor Risers

- Drain Diameter: 1” min to 1 ½” max

Floor installed version on page 55

PC	$770 ✓
PN	$825 ✓
BN	$915
UB/AB	$1065
CB/GB	$1305
PG/MG	$1435
PS/AS	$1495

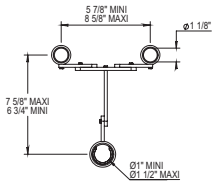

4-Hole Deck Tub Shower Set With Handshower

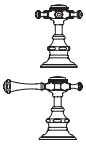

100.06.464

100.10.464

- ¾” ¼-Turn Ceramic Disc
- Fixed Spout with Integrated Diverter
- Retractable handshower with 79” Hose
- Flow Rate: 14 GPM
- All Metal Handle Available
- Anti-calcium Handshower

PC	$3065
PN	$3210
BN	$3455
UB/AB	$4320
CB/GB	$5205
PG/MG	$5855
PS/AS	$6125

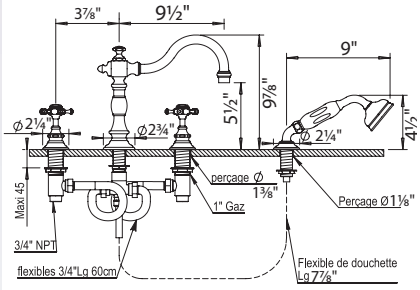

Wall Bath Spout

100.06.471

- 9.5’’ Fixed Spout
- Solid Brass
- ¾’ Female NPT

PC	$930
PN	$980
BN	$1060
UB/AB	$1315
CB/GB	$1590
PG/MG	$1780
PS/AS	$1865

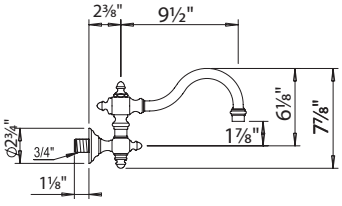

✓ **NOTE!** This check mark symbol indicates IN STOCK

06 | 10 Anthea Only Available in Canada

Exposed Thermostatic Valve with Handshower

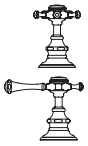

100.06.544-10

100.10.544-10

NEW! Larger Showerhead standard

- Two ¼-Turn Ceramic Disc Volume Control
- 10.6” Showerhead
- 60” Handshower Hose
- Includes Anti-calcium Handshower, Hose and Wall Hook
- Flow Rate: 9 GPM
- All Metal Handle Available
- Integrated Service Stops
- Can Come Plugged Under Second Volume Control With Hand Shower And Hose Separate Upon Request.
- Showerhead restrictor Available Upon request
- Option to change to 8’’ showerhead by ordering **100.06.544/100.10.544**
- Showerhead with 50° rotating ball joint

Retail Price

PC	$5255
PN	$5505
BN	$5775
UB/AB	$7410
CB/GB	$8940
PG/MG	$9995
PS/AS	$10510

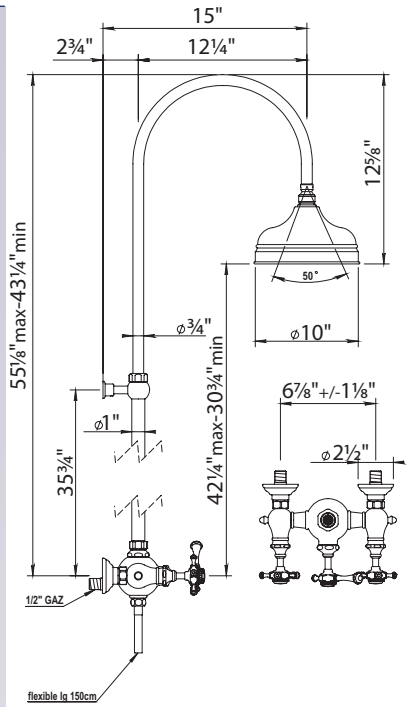

¾” Thermostatic Rough with Service Stops & Montmartre Thermostatic Trim

100.92.591BT

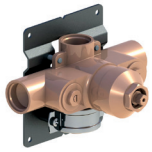

- ¾” NPT Inlets
- ¾” NPT Outlets
- Safety Stop @ 37 °C (99 Fahrenheit)
- 14 GPM @ 45 PSI
- 1 Outlet Plug supplied
- Integrated Service Stops

$690

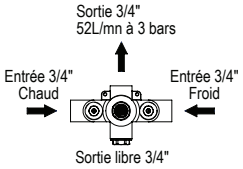

100.06.521

- Trim Plate for 100.92.591BT
- Solid Brass

PC	$1695
PN	$1795
BN	$1895
UB/AB	$2630
CB/GB	$2890
PG/MG	$3250
PS/AS	$3400

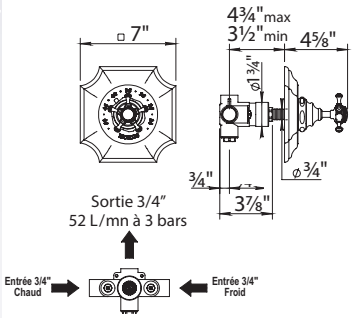

06 | 10 Anthea Only Available in Canada

Anthea Volume Control Trim Only

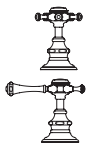

100.06.578

100.10.578

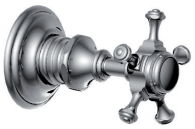

- Trim for ½" or ¾" Volume Control Roughs
- Trim for in Wall Diverters

	Retail Price
PC	$435
PN	$445
BN	$530
UB/AB	$675
CB/GB	$735
PG/MG	$830
PS/AS	$870

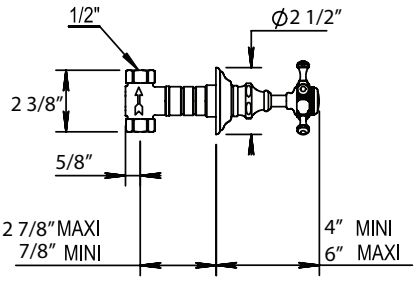

Matching Roughs

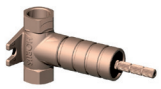

½" Volume Control, closing clockwise **100.92.046BT** $160 ✓

½" Volume Control, closing counter clockwise **100.92.048BT** $160 ✓

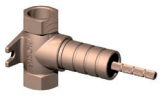

¾" Volume Control, closing clockwise **100.92.047BT** $180 ✓

¾" Volume Control, closing counter clockwise **100.92.049BT** $180 ✓

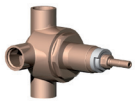

½" Two way in wall diverter; no shared ports **100.92.030BT** $475 ✓

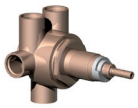

½" Three way in wall diverter; no shared ports **100.92.090BT** $530 ✓

See page 32 for full details

Vintage Handshower and Fixed Holder

100.01.589

- Wall Union
- 59" Metal Hose
- Fixed Handshower Holder
- Flow Rate : 2.2 GPM
- Cal Green Low Flow Aerator Available
- All Metal Handle Available
- Anti-calcium handshower

PC	$765
PN	$810
BN	$875
UB/AB	$1025
CB/GB	$1330
PG/MG	$1470
PS/AS	$1540

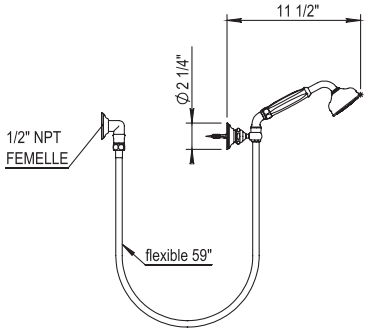

Vintage Handshower and Sliding Wall Bar Set

100.01.532

- Wall Union
- 59" Metal Hose
- Swiveling Handshower Holder
- 23 5/8" Sliding Wall Bar
- Cal Green Low Flow Aerator Available
- All Metal Handle Available
- Anti-calcium Handshower

PC	$1230
PN	$1240
BN	$1340
UB/AB	$1700
CB/GB	$2090
PG/MG	$2305
PS/AS	$2415

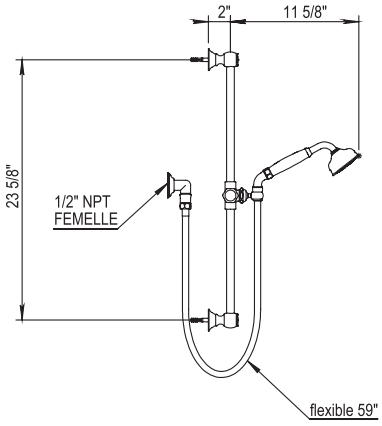

✓ **NOTE!** This check mark symbol indicates IN STOCK

Dover

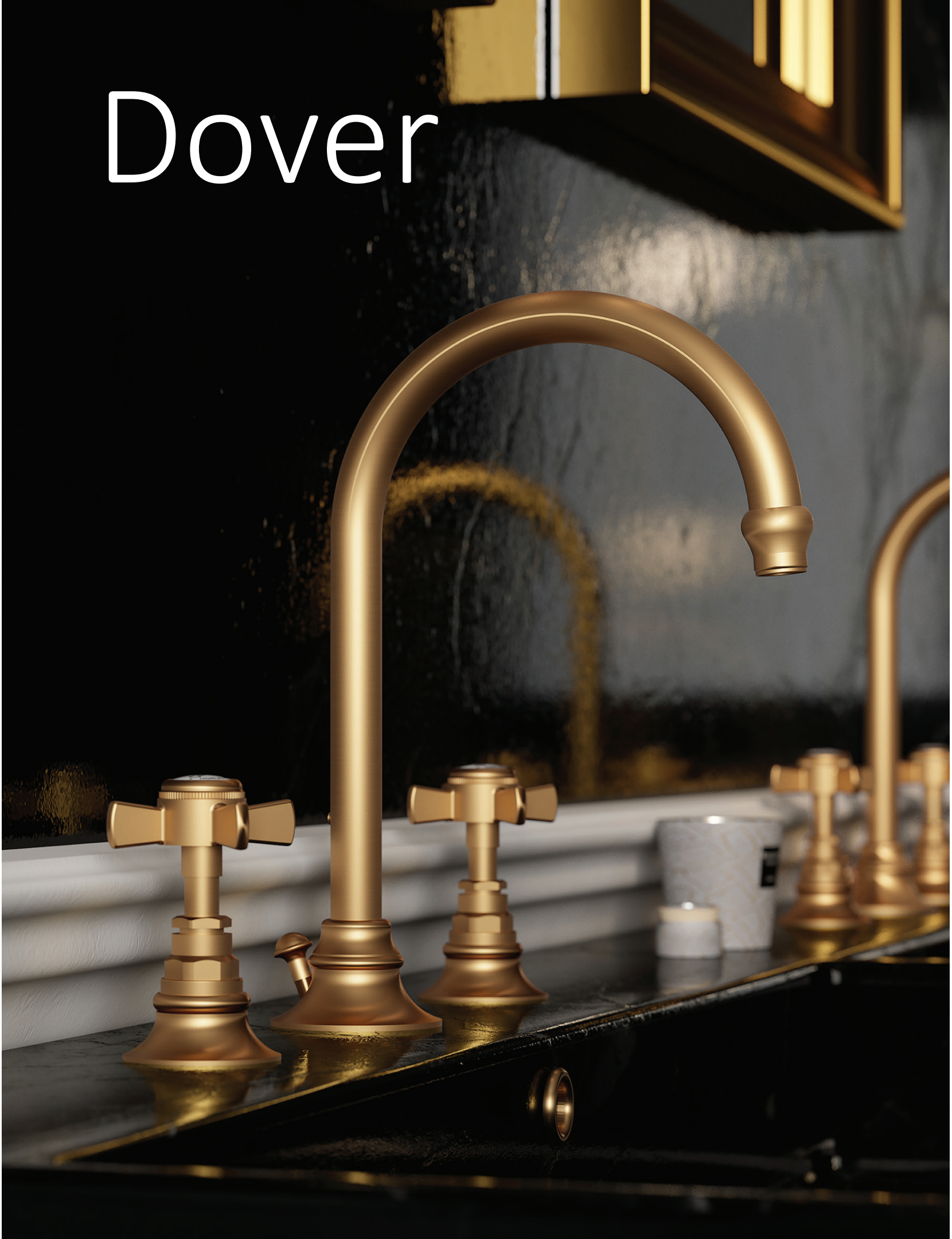

27 | 28 Dover

3-Hole Gooseneck Basin Mixer

102.28.261

102.27.261

- Swivel Spout
- ¼-Turn Ceramic Disc
- Flow Rate: 2.2 GPM
- CalGreen Low Flow Aerator and Low Lead Available

	Retail Price
PC	$1125 ✔
PN	$1160 ✔
BN	$1315
UB/AB	$1560
CB/GB	$1915
PG/MG	$2110
PS/AS	$2215

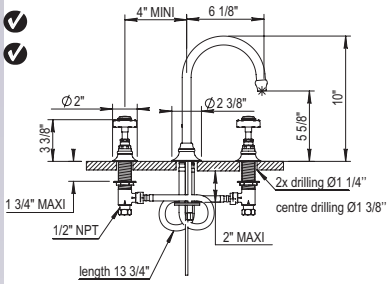

3-Hole Basin Mixer

102.26.260

102.27.260

- Fixed Spout
- ¼-Turn Ceramic Disc
- Flow Rate: 2.2 GPM
- CalGreen Low Flow Aerator and Low Lead Available

PC	$1125 ✔
PN	$1160 ✔
BN	$1315
UB/AB	$1560
CB/GB	$1915
PG/MG	$2110
PS/AS	$2215

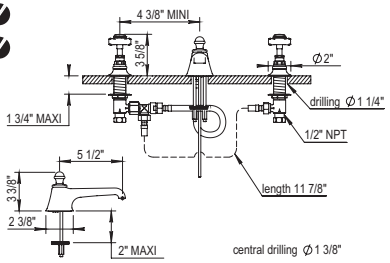

3-Hole Basin Mixer

102.28.262

102.27.262

- Swivel Spout
- ¼-Turn Ceramic Disc
- Lift & Turn Drain HOP93.011
- Flow Rate: 2.2 GPM
- CalGreen Low Flow Aerator and Low Lead Availablex
- Roughs Available Ref 100.92.046BT & 100.92.048BT **(Page 32)**

Trim Only available: i.e. 102.27.262PN-**TO**
Deduct $320 from complete list for Trim only Pricing

PC	$1480
PN	$1550
BN	$1760
UB/AB	$2160
CB/GB	$2660
PG/MG	$2935
PS/AS	$3075

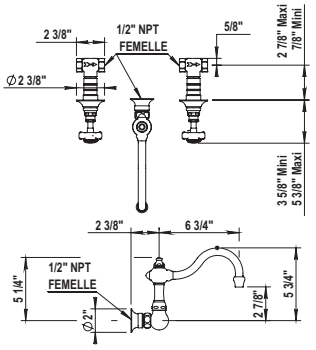

Single Hole Two-Handle Basin Mixer

102.28.208

- Fixed Spout
- ¼-Turn Ceramic Disc
- Flow Rate: 2.2 GPM

PC	$810
PN	$920
BN	$1195
UB/AB	$1160
CB/GB	$1430
PG/MG	$1570
PS/AS	$1645

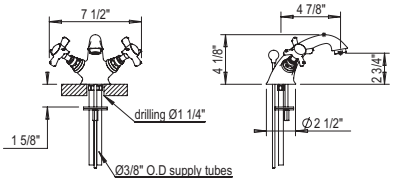

Single Hole Two-Handle Bidet Mixer

102.28.311

- Swivel Spout
- ¼-Turn Ceramic Disc
- 40º Rotating Aerator
- Flow Rate: 2.2 GPM

PC	$810
PN	$920
BN	$1195
UB/AB	$1160
CB/GB	$1430
PG/MG	$1570
PS/AS	$1645

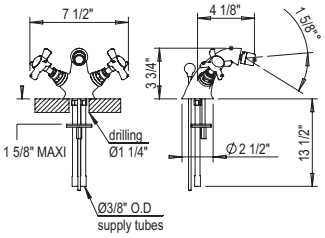

✔ **NOTE!** This check mark symbol indicates IN STOCK

27 | 28 Dover

Exposed Wall Mounted Tub Filler with Handshower

102.28.434

ANTI-SCALE NOZZLES

- Fixed Spout
- ¼-Turn Ceramic Disc
- 59” Shower Hose
- Flow Rate: 11 GPM
- Vacuum Breaker Built Inside the Body
- All Metal Handle Available
- Anti-calcium Handshower

Retail Price

PC	$1915 ✔
PN	$2105 ✔
BN	$2210
UB/AB	$2715
CB/GB	$2820
PG/MG	$3370
PS/AS	$3520

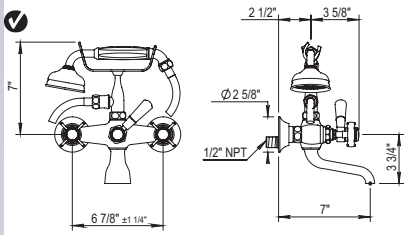

Exposed Deck Mounted Tub Filler with Handshower

102.28.435

ANTI-SCALE NOZZLES

- Fixed Spout
- ¼-Turn Ceramic Disc
- Excentrical Centers +/- ¾”
- Flow Rate: 11 GPM
- Vacuum Breaker Built Inside the Body
- All Metal Handle Available
- Anti-calcium Handshower

PC	$2140
PN	$2345 ✔
BN	$2495
UB/AB	$2785
CB/GB	$3150
PG/MG	$3750
PS/AS	$3895

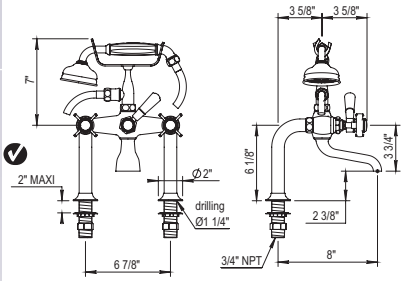

Exposed Floor Mounted Tub Filler with Handshower

102.28.498

ANTI-SCALE NOZZLES

- Fixed Spout
- ¼-Turn Ceramic Disc
- 59” Shower Hose
- ¾” NPT Connections
- Flow Rate: 11 GPM
- Vacuum Breaker Built Inside the Body
- All Metal Handle Available
- Anti-calcium Handshower

PC	$3075
PN	$3285 ✔
BN	$3620
UB/AB	$4440
CB/GB	$4995
PG/MG	$5995
PS/AS	$6275

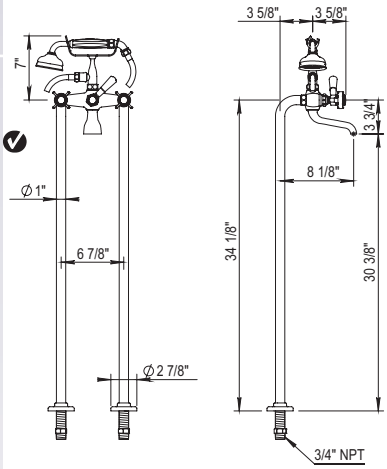

100.00.499

T-Connector for Floor Risers

- Drain Diameter: 1” min to 1 ½” max

Floor installed version on page 55

PC	$770 ✔
PN	$825 ✔
BN	$915
UB/AB	$1065
CB/GB	$1305
PG/MG	$1435
PS/AS	$1495

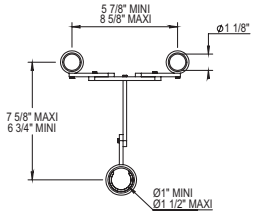

5-Hole Deck Tub Set

102.28.467

102.27.467

ANTI-SCALE NOZZLES

- ¼-Turn Ceramic Disc
- Fixed Spout with Deck Mounted Diverter
- Retractable handshower with 79” Hose
- Flow Rate: 15.9 GPM
- Anti-calcium Handshower

PC	$2245
PN	$2295
BN	$2875
UB/AB	$3270
CB/GB	$4010
PG/MG	$4425
PS/AS	$4630

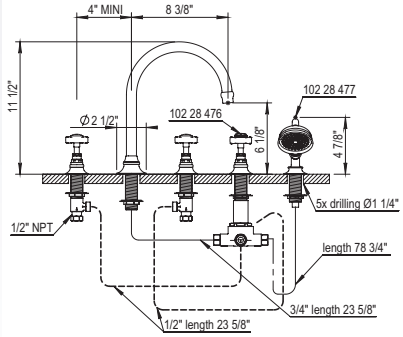

27 | 28 Dover

8” Tub Spout

102.28.471

- Solid Brass
- ¾” Female NPT

	Retail Price
PC	$365 ✓
PN	$420 ✓
BN	$500
UB/AB	$510
CB/GB	$625
PG/MG	$670
PS/AS	$715

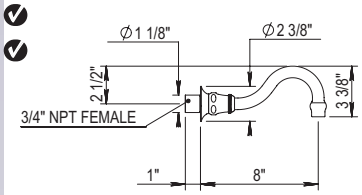

¾” Thermostatic Rough with Service Stops & Dover Thermostatic Trim

100.92.591BT

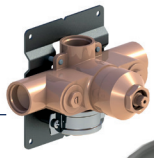

See page 30 for details

$690 ✓

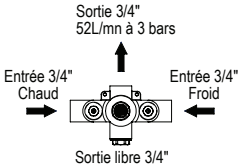

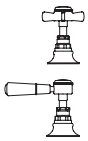

102.28.521

102.27.521

- Trim Plate for 100.92.591BT
- Solid Brass

PC	$890 ✓
PN	$1025 ✓
BN	$1255
UB/AB	$1230
CB/GB	$1390
PG/MG	$1700
PS/AS	$1745

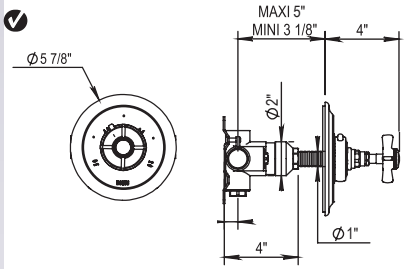

102.28.507

- Trim Plate for 100.92.591BT
- Solid Brass

NEW!

PC	$975
PN	$1120
BN	$1335
UB/AB	$1515
CB/GB	$1655
PG/MG	$1870
PS/AS	$1950

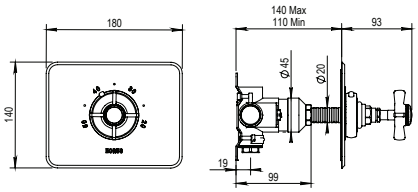

¾” Thermostatic Rough with Integrated Diverter & Dover Thermostatic Trim

100.92.593BT

See page 30 for details

$1370 ✓

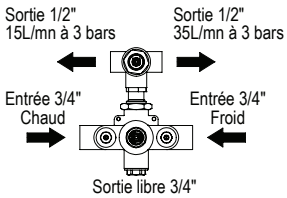

102.28.502

102.27.502

- Single Function 2 Way Diverter
- Trim Plate for 100.92.593BT
- Solid Brass
- Safety Stop @ 37 °C (99 Fahrenheit)

PC	$1185
PN	$1370
BN	$1730
UB/AB	$1700
CB/GB	$2100
PG/MG	$2320
PS/AS	$2420

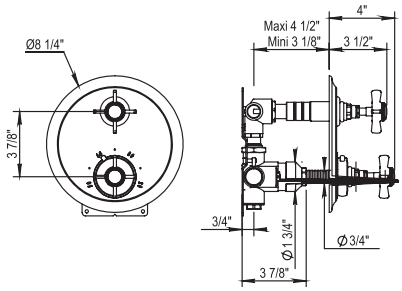

102.28.508

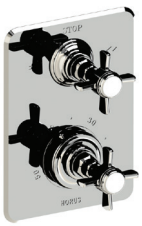

NEW!

- Single Function 2 Way Diverter
- Trim Plate for 100.92.593BT
- Solid Brass
- Safety Stop @ 37 °C (99 Fahrenheit)

PC	$1285
PN	$1480
BN	$1805
UB/AB	$1995
CB/GB	$2190
PG/MG	$2470
PS/AS	$2580

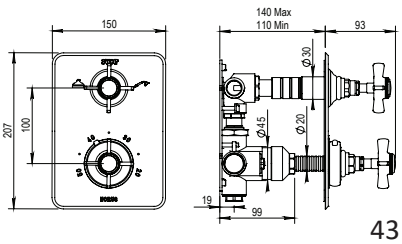

✓ **NOTE!** This check mark symbol indicates IN STOCK

27 | 28 Dover

¾” Thermostatic Rough with Integrated Diverter & Dover Thermostatic Trim

Retail Price

100.92.599BT

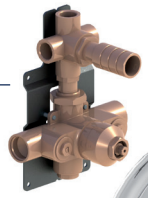

See page 30 for Details

$1420

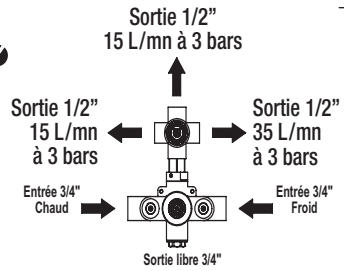

102.28.529

- Single Function 3-Way Diverter
- Trim Plate for 100.92.599BT
- Solid Brass
- Safety Stop @ 37 °C (99 Fahrenheit)

PC	$1250
PN	$1440
BN	$1755
UB/AB	$1725
CB/GB	$2125
PG/MG	$2350
PS/AS	$2445

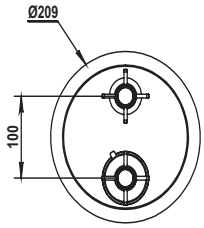

102.27.529

¾” Thermostatic Rough & Dover Thermostatic Trim

102.92.524BT

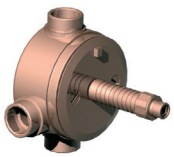

See page 29 for Details

$2180

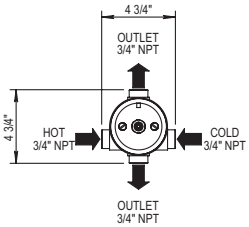

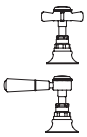

102.28.521

102.27.521

- Trim Plate for 102.92.524BT
- Solid Brass

PC	$890
PN	$1025
BN	$1255
UB/AB	$1230
CB/GB	$1390
PG/MG	$1700
PS/AS	$1745

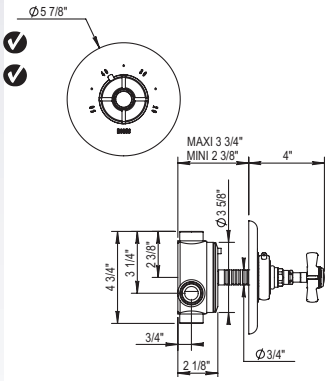

27 | 28 Dover

Dover Volume Control Trim Only

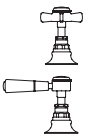

102.28.578

102.27.578

- Trim for ½" or ¾" Volume Control Roughs
- Trim for in Wall Diverters

	Retail Price
PC	$215
PN	$240
BN	$289
UB/AB	$315
CB/GB	$355
PG/MG	$425
PS/AS	$445

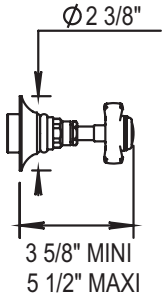

Matching Roughs

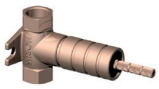

½" Volume Control, closing clockwise **100.92.046BT** $160

½" Volume Control, closing counter clockwise **100.92.048BT** $160

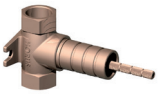

¾" Volume Control, closing clockwise **100.92.047BT** $180

¾" Volume Control, closing counter clockwise **100.92.049BT** $180

See page 32 for full details

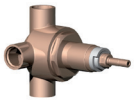

½" Two way in wall diverter; no shared ports **100.92.030BT** $475

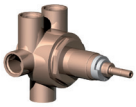

½" Three way in wall diverter; no shared ports **100.92.090BT** $530

Vintage Handshower and Fixed Handshower Holder

100.01.589

- Wall Union
- 59" Metal Hose
- Fixed Handshower Holder
- Flow Rate : 2.2 GPM
- All Metal Handle Available
- Anti-calcium Handshower

PC	$765
PN	$810
BN	$875
UB/AB	$1025
CB/GB	$1330
PG/MG	$1470
PS/AS	$1540

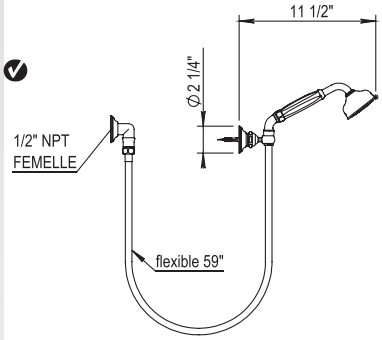

Vintage Handshower and Sliding Wall Bar Set

100.01.532

- Wall Union
- 59" Metal Hose
- Swiveling Handshower Holder
- 23 5/8" Sliding Wall Bar
- All Metal Handle Available
- Anti-calcium Handshower

PC	$1230
PN	$1240
BN	$1340
UB/AB	$1700
CB/GB	$2090
PG/MG	$2305
PS/AS	$2415

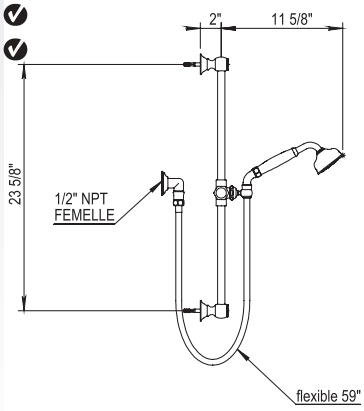

28 27 Accessories

Soap Basket

102.28.606

- Solid Brass
- Mounting Hardware Included

	Retail Price
PC	$465
PN	$535
BN	$635
UB/AB	$645
CB/GB	$770
PG/MG	$875
PS / AS	$910

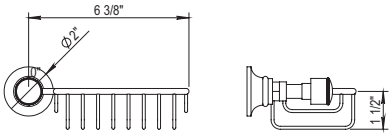

24” Towel Rail

102.28.611

- Solid Brass
- Mounting Hardware Included
- Cannot be cut to size

	Retail Price
PC	$725 ✔
PN	$760 ✔
BN	$810
UB/AB	$995
CB/GB	$1230
PG/MG	$1365
PS / AS	$1420

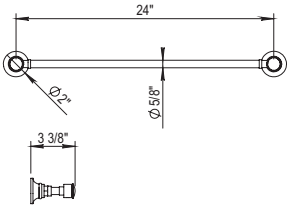

Single Robe Hook

102.28.613

- Solid Brass
- Mounting Hardware Included

	Retail Price
PC	$275 ✔
PN	$315 ✔
BN	$385
UB/AB	$380
CB/GB	$470
PG/MG	$510
PS / AS	$540

Double Posted Toilet Paper Holder

102.28.617

- Solid Brass
- Mounting Hardware Included

	Retail Price
PC	$660 ✔
PN	$695 ✔
BN	$710
UB/AB	$910
CB/GB	$1095
PG/MG	$1230
PS / AS	$1290

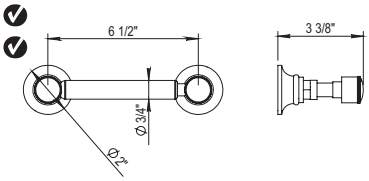

Single Posted Toilet Paper Holder

102.28.618

- Solid Brass
- Mounting Hardware Included

	Retail Price
PC	$335 ✔
PN	$385 ✔
BN	$455
UB/AB	$465
CB/GB	$550
PG/MG	$615
PS / AS	$655

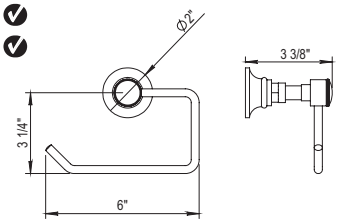

Eloise

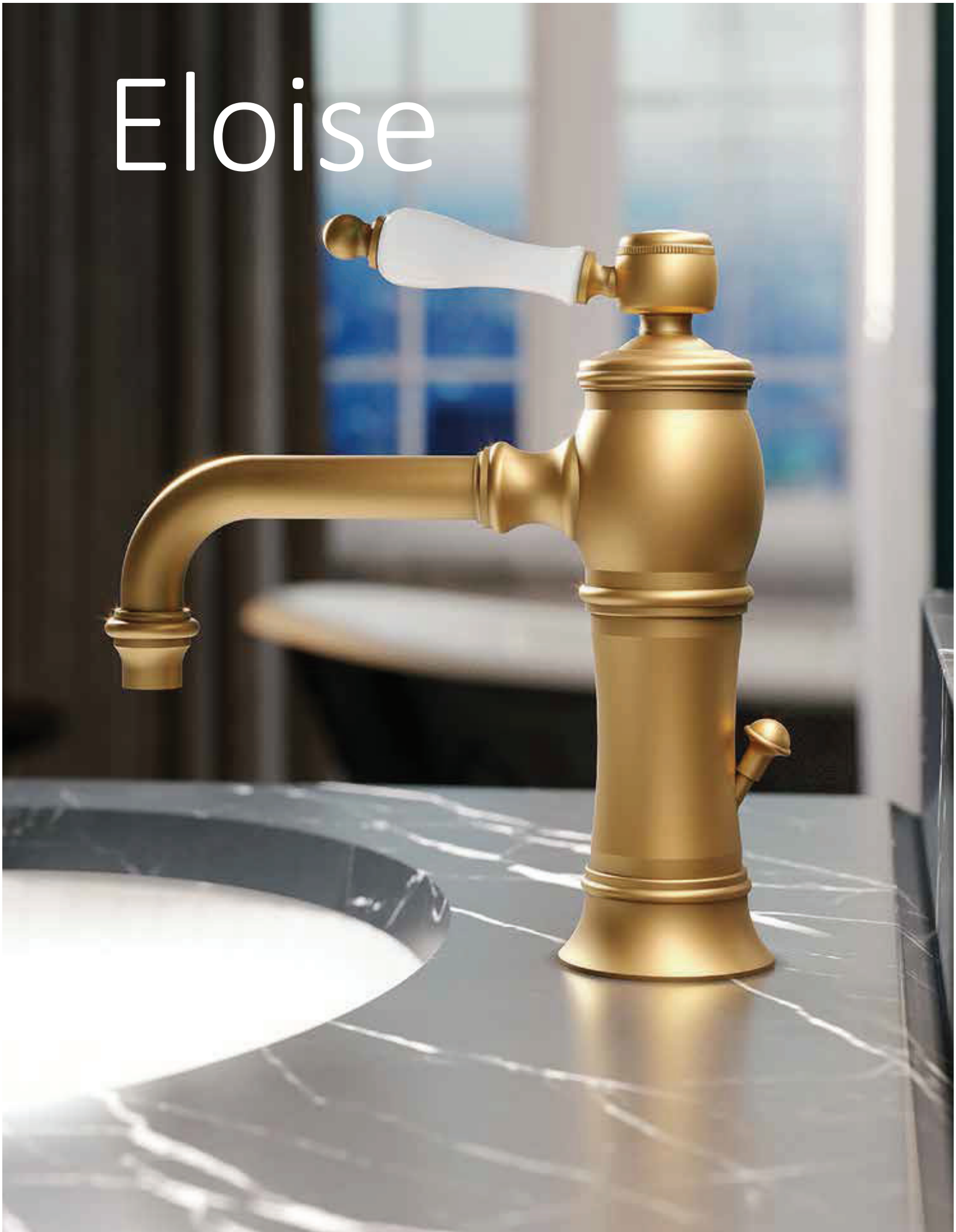

02 Eloïse

3-Hole Basin Mixer

100.02.260

- Swivel Spout
- ¼-Turn Ceramic Disc
- Flow Rate: 2.2 GPM
- CalGreen Low Flow Aerator Available

Retail Price

PC	$1075
PN	$1130
BN	$1215
UB/AB	$1640
CB/GB	$1830
PG/MG	$2025
PS/AS	$2055

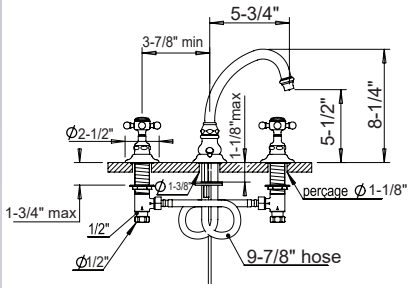

Single Lever Basin Mixer

100.02.708

- Swivel Spout
- Ceramic Disc Cartridge
- Flow Rate: 2.2 GPM
- All Metal Lever Handle Available
- CalGreen Low Flow Aerator Available

PC	$1090
PN	$1145
BN	$1310
UB/AB	$1735
CB/GB	$1960
PG/MG	$2345
PS/AS	$2460

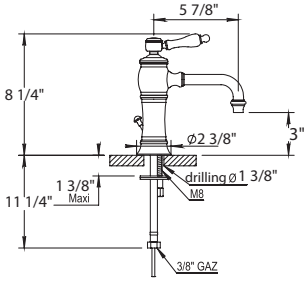

Single Lever Vessel Mixer

100.02.719

- Swivel Spout
- Ceramic Disc Cartridge
- Flow Rate: 2.2 GPM
- All Metal Lever Handle Available
- Drain is Not Included
- Lift And Turn Drain Available On Request HOP92.023 (p.91)
- CalGreen Low Flow Aerator Available

PC	$1320
PN	$1390
BN	$1500
UB/AB	$2010
CB/GB	$2190
PG/MG	$2465
PS/AS	$2570

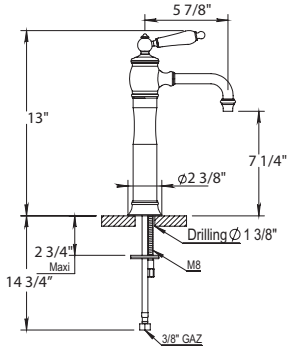

3-Hole Wall Mounted Basin Mixer

100.02.263

- ¼-Turn Ceramic Disc
- Lift & Turn Drain HOP93.011
- Fixed Spout
- Flow Rate: 2.2 GPM
- CalGreen Low Flow Aerator Available
- Roughs Available: Ref 100.92.046BT & 100.92.048BT (Page 32)

À ENCASTRER
CONCEALED

PC	$1230
PN	$1290
BN	$1380
UB/AB	$1795
CB/GB	$2085
PG/MG	$2295
PS/AS	$2415

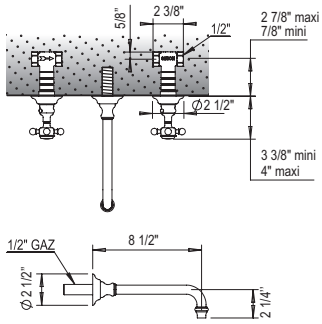

Trim Only available: i.e. 100.02.262PN-**TO**
Deduct $320 from complete list for Trim only Pricing

Dual Lever Basin Mixer

100.02.208

- Swivel Spout
- ¼-Turn Ceramic Disc
- Flow Rate: 2.2 GPM
- With pop-up waste

PC	$825
PN	$850
BN	$925
UB/AB	$1230
CB/GB	$1395
PG/MG	$1540
PS/AS	$1615

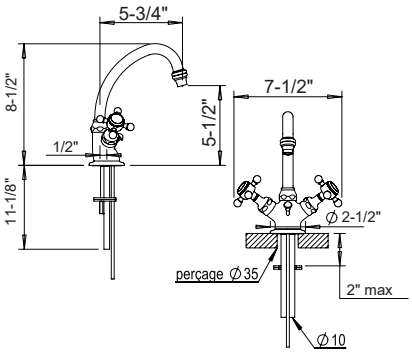

02 Eloïse

Single Hole Two-Handle Bidet Mixer

100.02.311

- Swivel Spout
- ¼-Turn Ceramic Disc
- 40º Rotating Aerator

Retail Price

PC	$935
PN	$985
BN	$1065
UB/AB	$1415
CB/GB	$1590
PG/MG	$1745
PS/AS	$1840

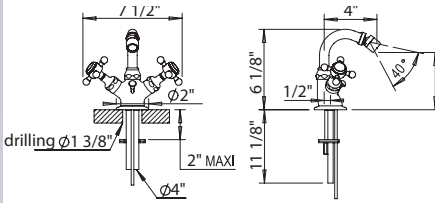

Exposed Wall Mounted Tub Filler with Handshower

100.02.414

PICOTS ANTICALCAIRES
ANTI-SCALE NOZZLES

- Fixed Spout
- ¼-Turn Ceramic Disc
- 59” Shower Hose
- Flow Rate: 11 GPM
- Vacuum Breaker Built Inside the Body
- All Metal Handle Available
- Anti-calcium Handshower

Lever Middle handle

PC	$2135
PN	$2235
BN	$2445
UB/AB	$3245
CB/GB	$3625
PG/MG	$4010
PS/AS	$4115

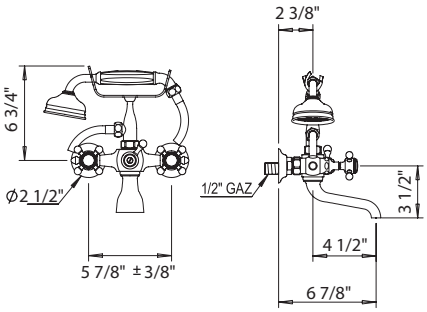

Exposed Wall Mounted Tub Filler with Handshower

100.02.485

PICOTS ANTICALCAIRES
ANTI-SCALE NOZZLES

- Fixed Spout
- ¼-Turn Ceramic Disc
- 59” Shower Hose
- Excentrical Centers ± 1”
- Flow Rate: 11 GPM
- Vacuum Breaker Built Inside the Body
- All Metal Handle Available
- Anti-calcium Handshower

Lever Middle handle

PC	$2420
PN	$2535
BN	$2730
UB/AB	$3350
CB/GB	$4110
PG/MG	$4525
PS/AS	$4735

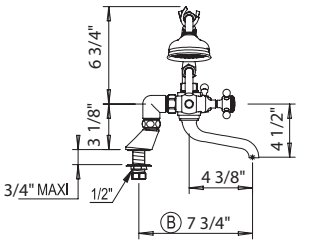

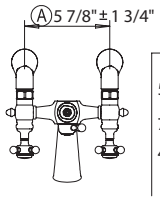

Ⓐ	Ⓑ
5 7/8"	7 3/4"
7 5/8"	6 7/8"
4 1/8"	6 7/8"

NOTE! This check mark symbol indicates IN STOCK

02 Eloïse

Exposed Floor Mounted Tub Filler with Handshower

100.02.498

- Fixed Spout
- ¼-Turn Ceramic Disc
- 59” Shower Hose
- Excentrical Centers ± 1”
- Flow Rate: 11 GPM
- Vacuum Breaker Built Inside The Body
- All Metal Handle Available
- Anti-calcium Handshower

100.00.499

T-Connector for Floor Risers

- Drain Diameter: 1” min to 1 ½” max

Retail Price

PC	$3100
PN	$3245
BN	$3500
UB/AB	$4715
CB/GB	$5270
PG/MG	$5820
PS/AS	$6070

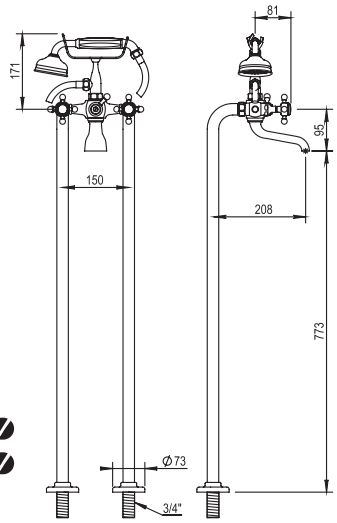

PC	$770 ✔
PN	$825 ✔
BN	$915
UB/AB	$1065
CB/GB	$1305
PG/MG	$1435
PS/AS	$1495

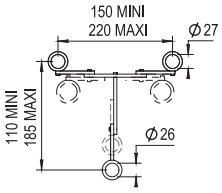

Exposed Thermostatic Valve with Handshower

100.02.544-10

NEW! Larger Showerhead Standard

- 10.6’’ Showerhead
- 59” Shower Hose
- Includes anti calcium handshower, hose and wall hook
- Can come plugged under second volume control with handshower and hose separate upon request
- Showerhead restrictor available upon request
- Option to change to 8’’ by ordering **100.02.544**
- Showerhead with 50° rotating ball joint

PC	$3745
PN	$4100
BN	$4530
UB/AB	$5960
CB/GB	$6650
PG/MG	$7340
PS/AS	$7675

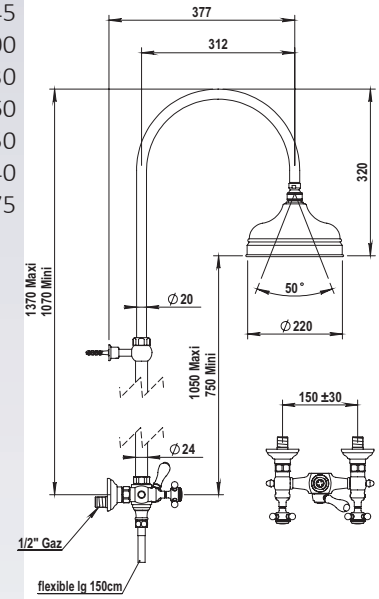

02 Eloïse

¾” Thermostatic Rough with Service Stops & Eloise Thermostatic Trim

		Retail Price
100.92.591BT	See page 30 for details	$690 ✓
100.01.521	• Trim Plate for 100.92.591BT • Solid Brass	**PC** $985 **PN** $1015 **BN** $1070 **UB/AB** $1495 **CB/GB** $1675 **PG/MG** $1850 **PS/AS** $1930
100.01.507	• Trim Plate for 100.92.591BT • Solid Brass	**PC** $1025 **PN** $1055 **BN** $1115 **UB/AB** $1595 **CB/GB** $1745 **PG/MG** $1970 **PS/AS** $2059

NEW!

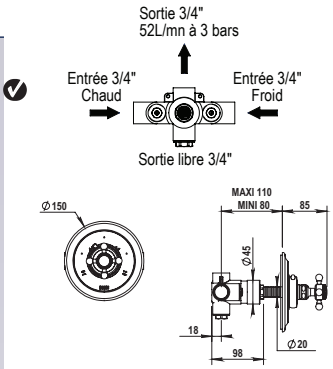

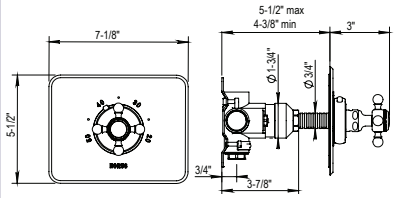

¾” Thermostatic Rough & Eloise Thermostatic Trim

100.92.593BT	See page 30 for details	$1370 ✓
100.01.502	• Single Function 2 Way Diverter • Trim Plate for 100.92.593BT • Solid Brass • Safety Stop @ 37 °C (99 Fahrenheit)	**PC** $1285 **PN** $1475 **BN** $1795 **UB/AB** $1950 **CB/GB** $2185 **PG/MG** $2290 **PS/AS** $2395
100.01.508	• Single Function 2 Way Diverter • Trim Plate for 100.92.593BT • Solid Brass • Safety Stop @ 37 °C (99 Fahrenheit)	**PC** $1335 **PN** $1535 **BN** $1870 **UB/AB** $2079 **CB/GB** $2270 **PG/MG** $2565 **PS/AS** $2680

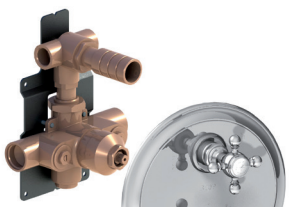

NEW!

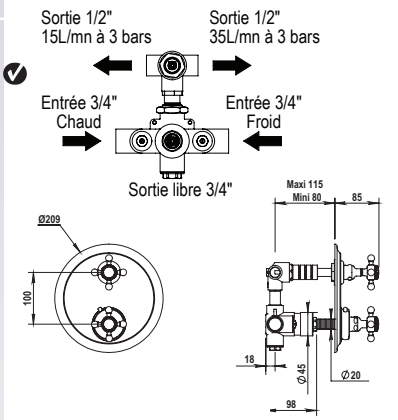

¾” Thermostatic Rough with Integrated Diverter & Eloise Thermostatic Trim

100.92.599BT	See page 30 for details	$1420 ✓
100.01.529	• Single Function 3 Way Diverter • Trim Plate for 100.92.599BT • Solid Brass • Safety Stop @ 37 °C (99 Fahrenheit)	**PC** $1300 **PN** $1490 **BN** $1815 **UB/AB** $1950 **CB/GB** $2210 **PG/MG** $2440 **PS/AS** $2545

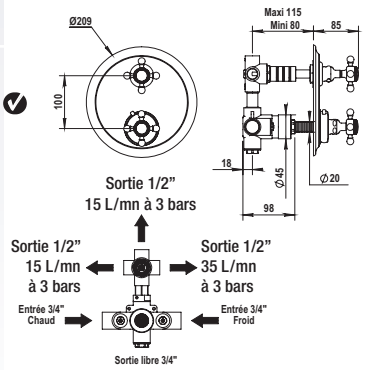

✓ **NOTE!** This check mark symbol indicates IN STOCK

02 Eloïse

Eloise Volume Control Trim Only

100.01.578

- Trim for ½" or ¾" Volume Control Roughs
- Trim for in Wall Diverters

	Retail Price
PC	$275
PN	$290
BN	$320
UB/AB	$405
CB/GB	$465
PG/MG	$510
PS/AS	$535

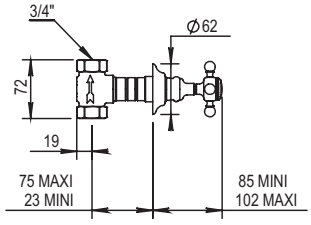

Matching Roughs

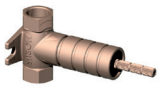

½" Volume Control, closing clockwise **100.92.046BT** $160

½" Volume Control, closing counter clockwise **100.92.048BT** $160

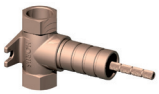

¾" Volume Control, closing clockwise **100.92.047BT** $180

¾" Volume Control, closing counter clockwise **100.92.049BT** $180

See page 32 for full details

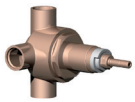

½" Two way in wall diverter; no shared ports **100.92.030BT** $475

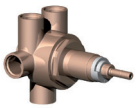

½" Three way in wall diverter; no shared ports **100.92.090BT** $530

Vintage Handshower and Fixed Handshower Holder

100.01.589

- Wall Union
- 59" Metal Hose
- Fixed Handshower Holder
- Flow Rate : 2.2 GPM
- All Metal Handle Available
- Anti-calcium Handshower

PC	$765
PN	$810
BN	$875
UB/AB	$1025
CB/GB	$1330
PG/MG	$1470
PS/AS	$1540

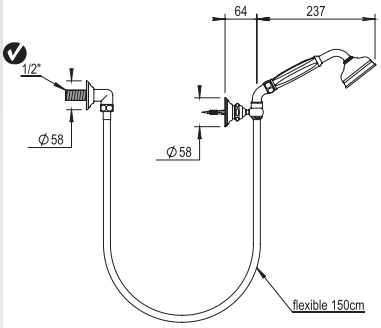

Vintage Handshower and Sliding Wall Bar Set

100.01.532

- Wall Union
- 59" Metal Hose
- Swiveling Handshower Holder
- 23 5/8" Sliding Wall Bar
- All Metal Handle Available
- Anti-calcium Handshower

PC	$1230
PN	$1240
BN	$1340
UB/AB	$1700
CB/GB	$2090
PG/MG	$2305
PS/AS	$2415

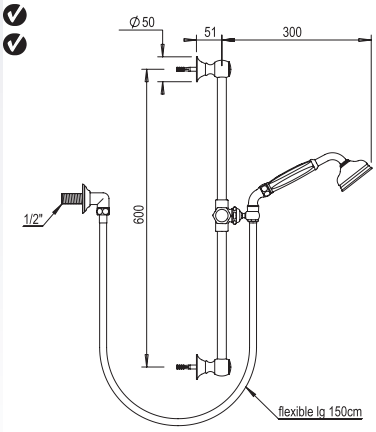

Monroe

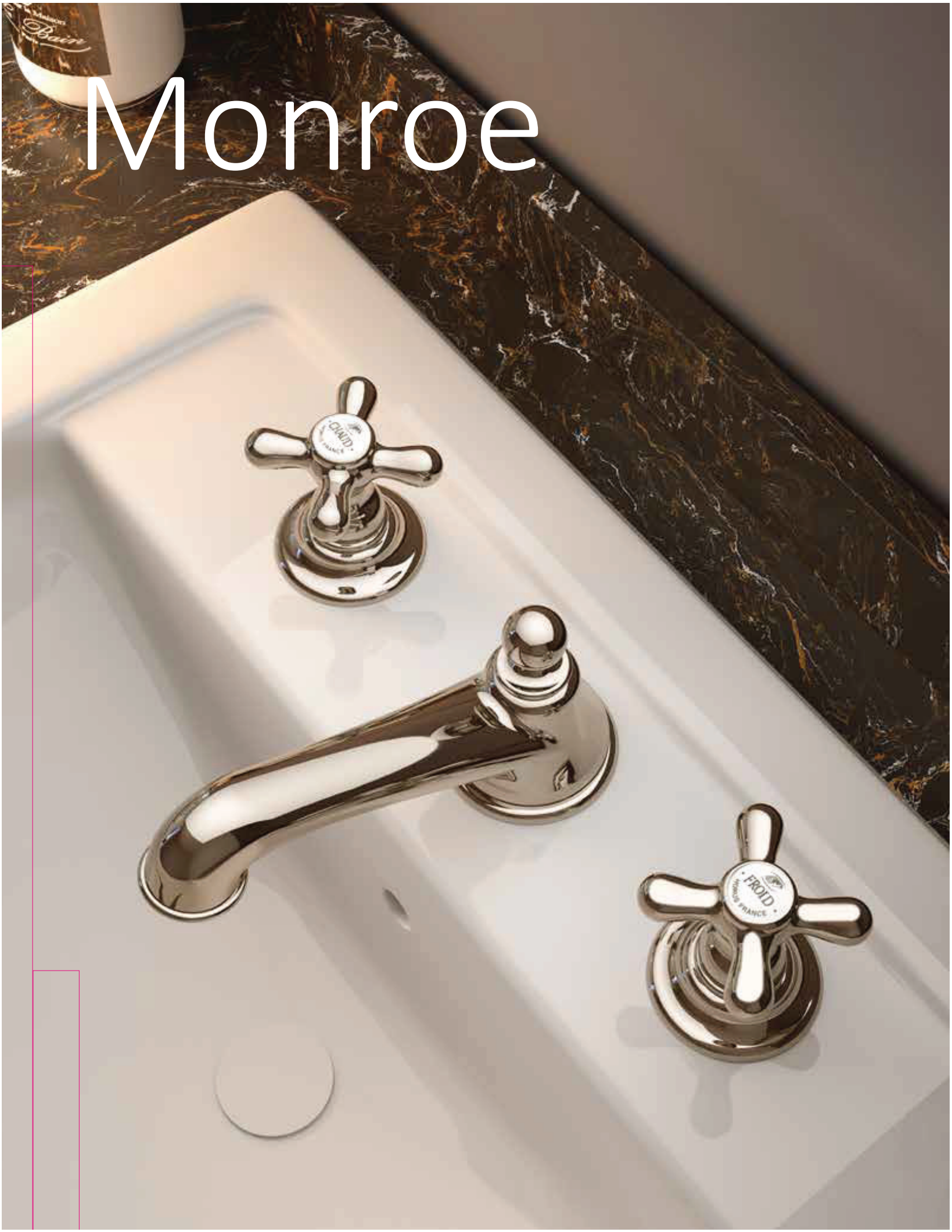

04 Monroe

3-Hole Basin Mixer

Retail Price

100.04.261

- Swivel Spout
- ¼-Turn Ceramic Disc
- Flow Rate: 2.2 GPM
- CalGreen Low Flow Aerator and Low Lead Available

PC	$ 1125
PN	$1265
BN	$1530
UB/AB	$1715
CB/GB	$1915
PG/MG	$2110
PS/AS	$2210

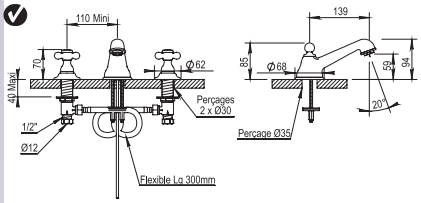

Basin Pillar Tap

100.04.231

- Fix Spout
- ¼-Turn Ceramic Disc
- No Aerator

PC	$280
PN	$340
BN	$370
UB/AB	$420
CB/GB	$470
PG/MG	$510
PS/AS	$540

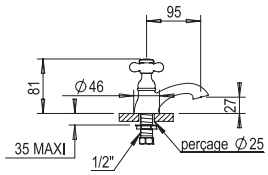

Exposed Wall Mounted Tub Filler with Handshower

100.04.434

- Swivel Spout
- ¼-Turn Ceramic Disc
- Lift & Turn Drain
- Flow Rate: 2.2 GPM
- CalGreen Low Flow Aerator and Low Lead Available

Lever Middle handle

PC	$1835
PN	$1935
BN	$2060
UB/AB	$2990
CB/GB	$3075
PG/MG	$3695
PS/AS	$3850

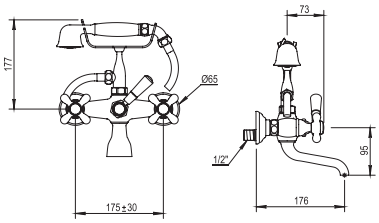

Exposed Deck Mounted Tub Filler with Handshower

100.04.435

- Fixed Spout
- ¼-Turn Ceramic Disc
- Flow Rate: 2.2 GPM

Lever Middle handle

PC	$2235
PN	$2345
BN	$2905
UB/AB	$3495
CB/GB	$3910
PG/MG	$4425
PS/AS	$4515

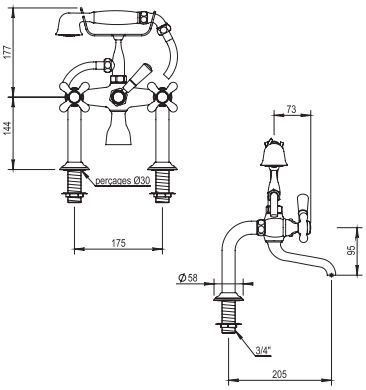

04 Monroe

Exposed Floor Mounted Tub Filler with Handshower

100.04.498

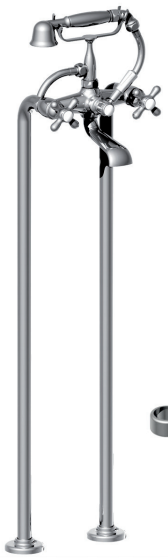

- Fixed Spout
- ¼-Turn Ceramic Disc
- 59" Shower Hose
- ¾" NPT Connections
- Flow Rate: 11 GPM
- Vacuum Breaker Built Inside the Body
- All Metal Handle Available
- Anti-calcium Handshower

Retail Price	
PC	$3035
PN	$3135
BN	$3335
UB/AB	$4870
CB/GB	$5035
PG/MG	$5995
PS/AS	$6295

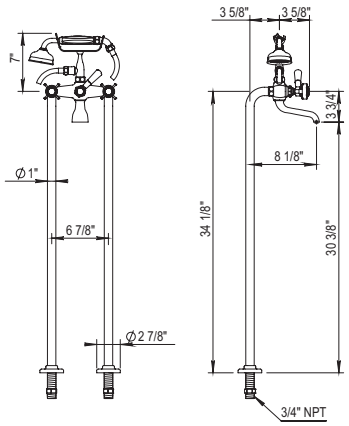

100.00.499

T-Connector for Floor Risers

- Drain Diameter: 1'' min to 1 1/2'' max

PC	$770 ✓
PN	$825 ✓
BN	$915
UB/AB	$1065
CB/GB	$1305
PG/MG	$1435
PS/AS	$1495

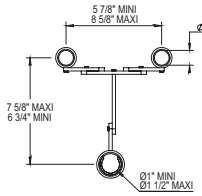

100.00.495

T-Connector for Floor Risers

PC	$935
PN	$940
BN	$1050
UB/AB	$1415
CB/GB	$1590
PG/MG	$1745
PS/AS	$1840

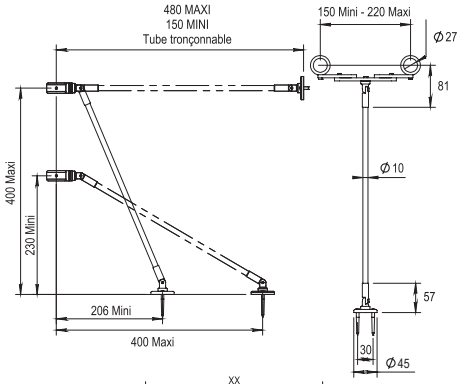

100.00.496

Fixing Set for Columns

PC	$640
PN	$675
BN	$715
UB/AB	$975
CB/GB	$1085
PG/MG	$1200
PS/AS	$1250

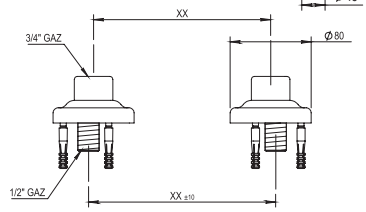

¾" Thermostatic Rough with Service Stops & Monroe Thermostatic Trim

100.92.591BT

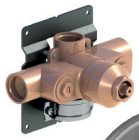

See page 30 for details

100.04.521

- Trim Plate for 100.92.591BT
- Solid Brass

$690 ✓	
PC	$945
PN	$1090
BN	$1325
UB/AB	$1315
CB/GB	$1610
PG/MG	$1775
PS/AS	$1850

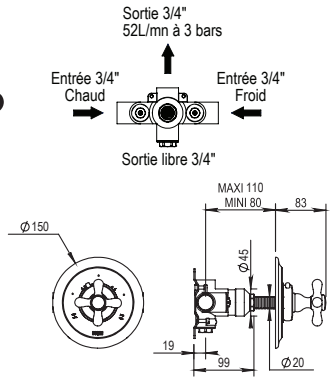

100.04.507

- Trim Plate for 100.92.591BT
- Solid Brass

NEW!

PC	$990
PN	$1135
BN	$1380
UB/AB	$1535
CB/GB	$1680
PG/MG	$1895
PS/AS	$1979

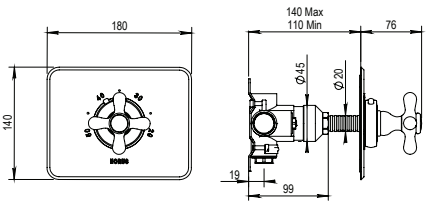

✓ **NOTE!** This check mark symbol indicates IN STOCK

04 Monroe

¾” Thermostatic Rough & Monroe Thermostatic Trim

		Retail Price
100.92.593BT	See page 30 for details	$1370
100.04.502	• Single Function 2-Way Diverter • Trim Plate for 100.92.593BT • Solid Brass • Safety Stop @ 37 °C (99 Fahrenheit)	**PC** $1245 **PN** $1435 **BN** $1700 **UB/AB** $1725 **CB/GB** $2060 **PG/MG**$2335 **PS/AS** $2440
100.04.508 **NEW!**	• Single Function 2-Way Diverter • Trim Plate for 100.92.593BT • Solid Brass • Safety Stop @ 37 °C (99 Fahrenheit)	**PC** $1295 **PN** $1490 **BN** $1815 **UB/AB** $2015 **CB/GB** $2205 **PG/MG**$2485 **PS/AS** $2595

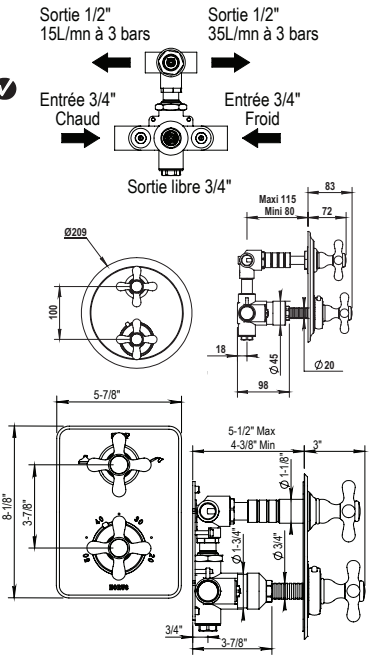

¾” Thermostatic Rough with Integrated Diverter & Monroe Thermostatic Trim

100.92.599BT	See page 30 for details	$1420
100.04.529	• Single Function 3 Way Diverter • Trim Plate for 100.92.599BT • Solid Brass • Safety Stop @ 37 °C (99 Fahrenheit)	**PC** $1260 **PN** $1445 **BN** $1765 **UB/AB** $1905 **CB/GB** $2145 **PG/MG**$2365 **PS/AS** $2465

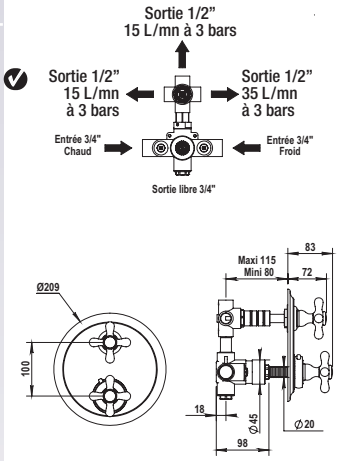

Monroe Volume Control Trim Only

100.04.578	• Trim for ½” or ¾” Volume Control Roughs • Trim for in Wall diverters	**PC** $240 **PN** $255 **BN** $280 **UB/AB** $335 **CB/GB** $400 **PG/MG** $450 **PS/AS** $475

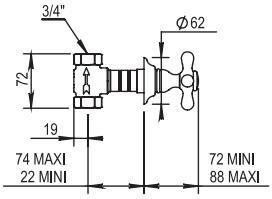

½” Volume Control Rough - Closing clockwise

100.92.046BT	See page 32 for details and more rough-in options	$160

CHAUD
FROID

CONTEMPORARY COLLECTION

MYRIAD

BY STUDIO MHNA.

MYRIAD is the first collection of bathroom fittings to have combined traditional craftsmanship with Needle Engraving, an ornamentation composed of straight and wavy lines that intertwine or cross symmetrically. The result is a checkered pattern.

Collection designed in collaboration with Marc Hertrich's and Nicolas Adnet's MHNA studio.

STANDARD FINISHES

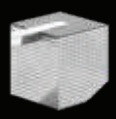

PC
Chrome

BC
Black Chrome

PG
Polished Gold
Living Finish

55 Myriad

PC Chrome
Chrome

BC Black Chrome
Chrome Noir

PG Polished Gold
Doré Brillant

Single Hole Single Lever Basin Mixer

Retail Price

100.55.708

- Fixed Spout
- 1/4-Turn Ceramic Disc
- Flow Rate: 2.2 GPM
- Pop up drain
- Water Saver at half way point

PC $1310 ✔
BC $1470
PG $2240

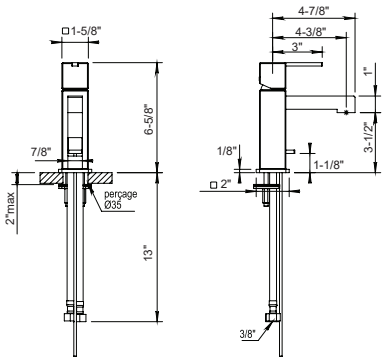

Single Hole Single Lever Vessel Mixer

100.55.709

- Fixed Spout
- 1/4-Turn Ceramic Disc
- Flow Rate: 2.2 GPM
- Drain is Not Included
- Lift And Turn Drain Available On Request

PC $1310 ✔
BC $1470
PG $2240

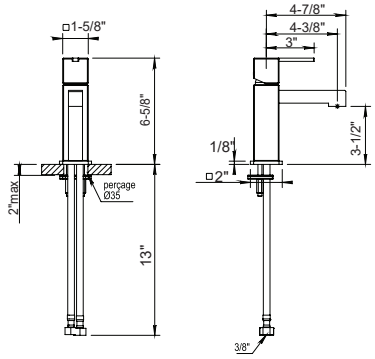

3 Hole Basin Mixer

100.55.260

- Fixed Spout
- 1/4-Turn Ceramic Disc
- Flow Rate: 2.2 GPM
- Low Flow aerator available upon request

PC $2195 ✔
BC $2405
PG $3350

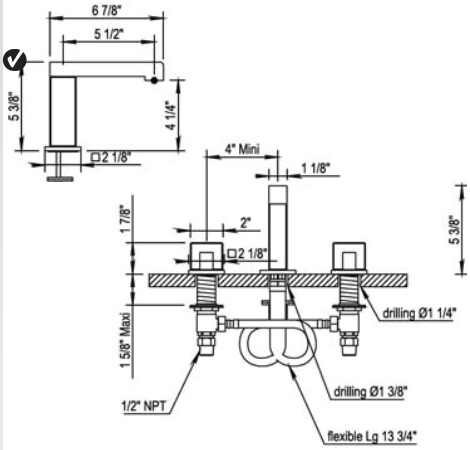

4-Hole Deck Tub & Shower Set

100.55.466

- ¼-Turn Ceramic Disc
- Fixed Spout with Integrated Diverter
- Retractable Handshower with 79" Hose
- Flow Rate: 14 GPM
- All Metal Handle Available
- Anti-calcium Handshower

PC $2620
BC $2935
PG $4475

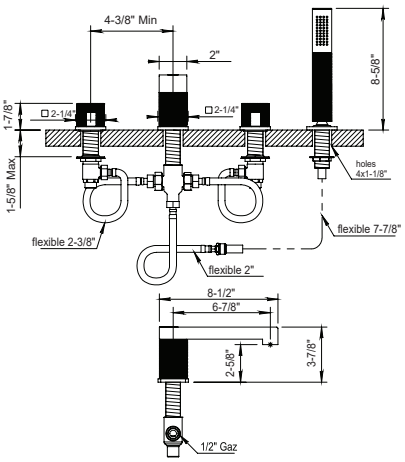

55 Myriad

PC Chrome
Chrome

BC Black Chrome
Chrome Noir

PG Polished Gold
Doré Brillant

Exposed Floor Mounted Tub FIller with Handshower

Retail Price

100.55.798

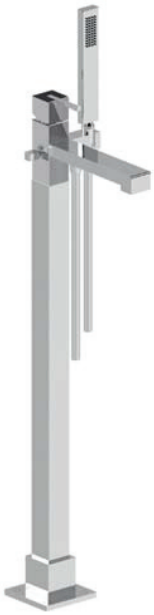

- ¼-Turn Ceramic Disc
- Fixed Spout with Integrated Diverter
- 59” Shower Hose
- Flow Rate: 11 GPM
- Anti-calcium Handshower

PC $4325
BC $4845
PG $7375

Exposed Thermostatic Valve with Handshower

100.55.796

- Single function 2 way diverter with built in volume control
- 10” Showerhead
- 60” handshower hose
- 2.5GPM @ 45PSI
- Showerhead restrictor available upon request
- Anti-Calcium hands-hower and shower head
- Showerhead with 50° rotating ball joint

PC $3945
BC $4415
PG $6725

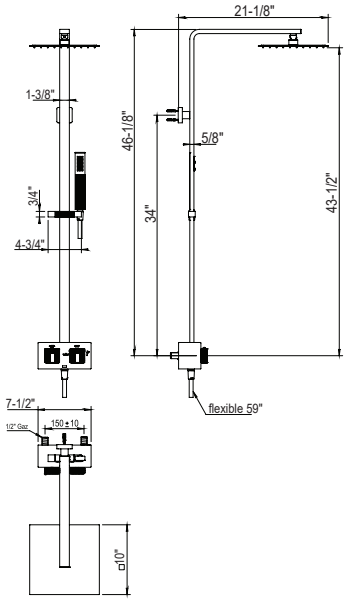

Stainless steel shower head 250 x 250 mm, thickness 14 mm, 14 L/mn, used for Black Chrome (BC) and Polished Gold (PG) finishes

Pomme de douche inox 250 x 250 mm, épaisseur 14 mm, 14 L/mn, utilisée pour les finitions Chrome Noir (BC) et Doré Brillant (PG).

55 Myriad

PC Chrome
Chrome

BC Black Chrome
Chrome Noir

PG Polished Gold
Doré Brillant

¾” Thermostatic Rough & Trim

Retail Price

100.55.598

- 3/4” NPT inlets
- 2x 1/2” NPT outlets
- Flow Rate: 22L/min at 3 bars
- Diverter
- 1 outlet plug supplied

$1325

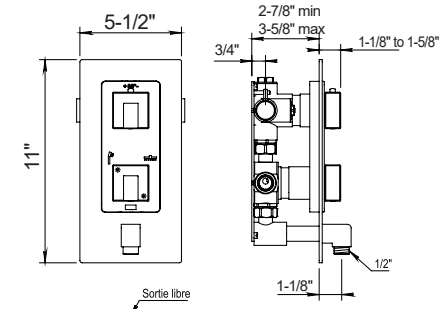

100.55.504

- Single function 2 way diverter **with built in volume control**
- Trim Plate for 100.55.598
- Solid Brass
- 2-way diverter Safety Stop @ 38 °C (100.4 °F)
- Elbow outlet included
- Must use 100.55.582 or 100.55.542 handshower

PC $1820
BC $2035
PG $3085

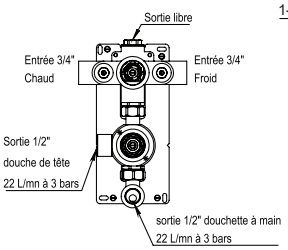

Shower Mixer with Diverter

100.55.701

- Wall mounted mixing valve
- Solid Brass
- 1 outlet
- Flow rate: 23L/min 3 bars

PC $1060
BC $1155
PG $1795

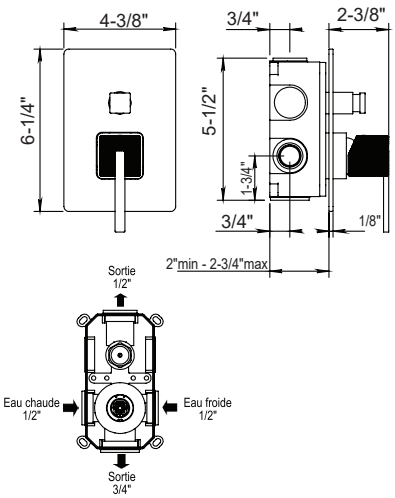

Handshower and Sliding Wall Bar Set

100.55.542

- 59” Metal Hose
- Swiveling Handshower Holder
- 23 ⅝” Sliding Wall Bar
- All Metal Handle
- Anti-calcium Handshower

PC $670
BC $745
PG $1130

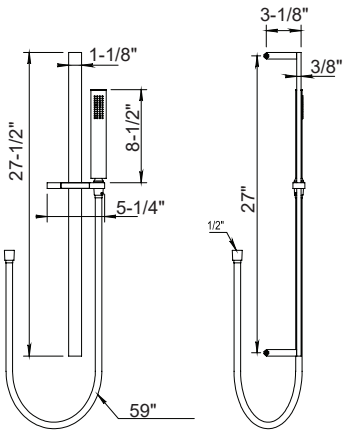

55 Myriad

PC Chrome
Chrome

BC Black Chrome
Chrome Noir

PG Polished Gold
Doré Brillant

Handshower and Hose Set

			Retail Price
100.55.582		• 59” Metal Hose • Swiveling Handshower Holder • All Metal Handle	**PC** $435 **BC** $490 **PG** $745

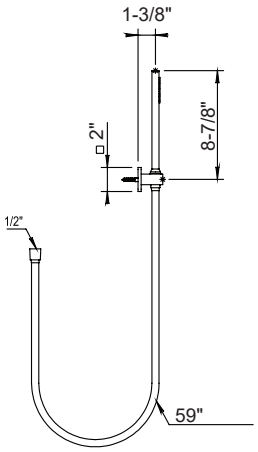

Shower Heads

100.55.536 PICOTS ANTICALCAIRES ANTI-SCALE NOZZLES		• 10’’ Stainless Steel Shower Head with Anti-scale nozzles • 1/2’’ NPT Connection • Flow Rate: 12L/min • Showerhead Restrictor available upon request • 50° rotating ball joint	**PC** $795
100.55.537 PICOTS ANTICALCAIRES ANTI-SCALE NOZZLES		• 10’’ Stainless Steel Shower Head with Anti-scale nozzles • 1/2’’ NPT Connection • Flow Rate: 14L/min • Showerhead Restrictor available upon request • 50° rotating ball joint	**PC** $1070 **BC** $1200 **PG** $1805
100.55.540 PICOTS ANTICALCAIRES ANTI-SCALE NOZZLES		• 10’’ Stainless Steel Shower Head with Anti-scale nozzles • 1/2’’ NPT Connection • Flow Rate: 12L/min • Showerhead Restrictor available upon request • 50° rotating ball joint	**PC** $615
100.55.538 PICOTS ANTICALCAIRES ANTI-SCALE NOZZLES		• 10’’ Stainless Steel Shower Head with Anti-scale nozzles • 1/2’’ NPT Connection • Flow Rate: 14L/min • Showerhead Restrictor available upon request • 50° rotating ball joint	**PC** $880 **BC** $985 **PG** $1495

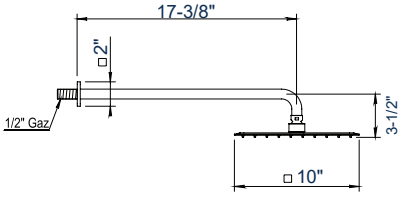

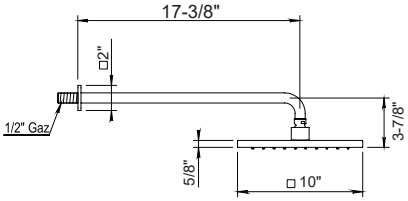

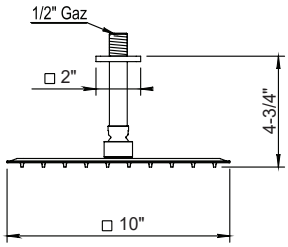

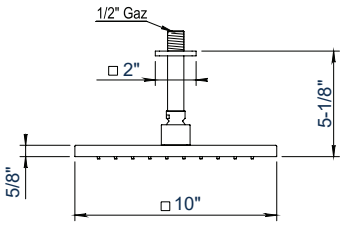

55 Myriad

PC Chrome
Chrome

BC Black Chrome
Chrome Noir

PG Polished Gold
Doré Brillant

Wall Tumbler Set

100.55.604

- Solid Brass
- Porcelain Tumbler
- Mounting Hardware Included

Retail Price

PC	$395
BC	$430
PG	$670

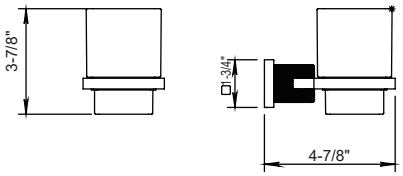

Wall Soap Dish

100.55.605

- Solid Brass
- Porcelain Soap Dish
- Mounting Hardware Included

PC	$345
BC	$385
PG	$610

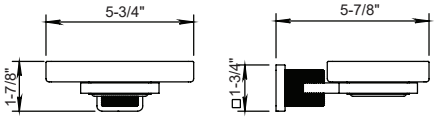

Towel Ring

100.55.609

- Solid Brass
- Mounting Hardware Included

PC	$405
BC	$440
PG	$690

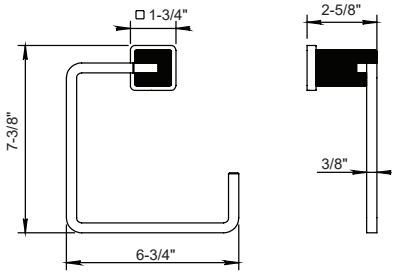

Robe Hook

100.55.613

- Solid Brass
- Mounting Hardware Included

PC	$255
BC	$290
PG	$440

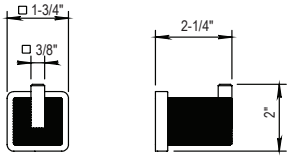

12" Towel Rail

100.55.610

- Solid Brass
- Mounting Hardware Included

PC	$590
BC	$665
PG	$995

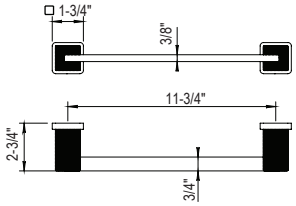

24" Towel Rail

100.55.611

- Solid Brass
- Mounting Hardware Included

PC	$665
BC	$745
PG	$1135

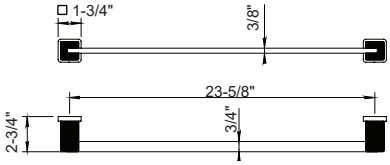

55 Myriad

PC Chrome
Chrome

BC Black Chrome
Chrome Noir

PG Polished Gold
Doré Brillant

Spare Toilet Roll Holder

100.55.618

- Solid Brass
- Mounting Hardware Included

Retail Price	
PC	$375
BC	$420
PG	$640

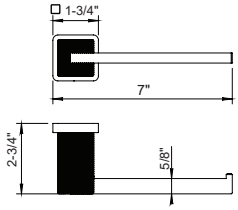

Toilet Brush Set

100.55.619

- Solid Brass
- Mounting Hardware Included

PC	$790
BC	$885
PG	$1335

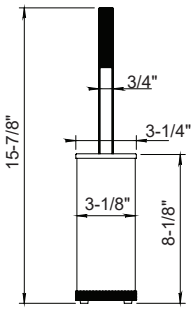

Toilet Roll Holder

100.55.617

- Solid Brass
- Mounting Hardware Included

PC	$360
BC	$405
PG	$615

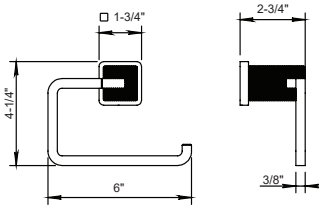

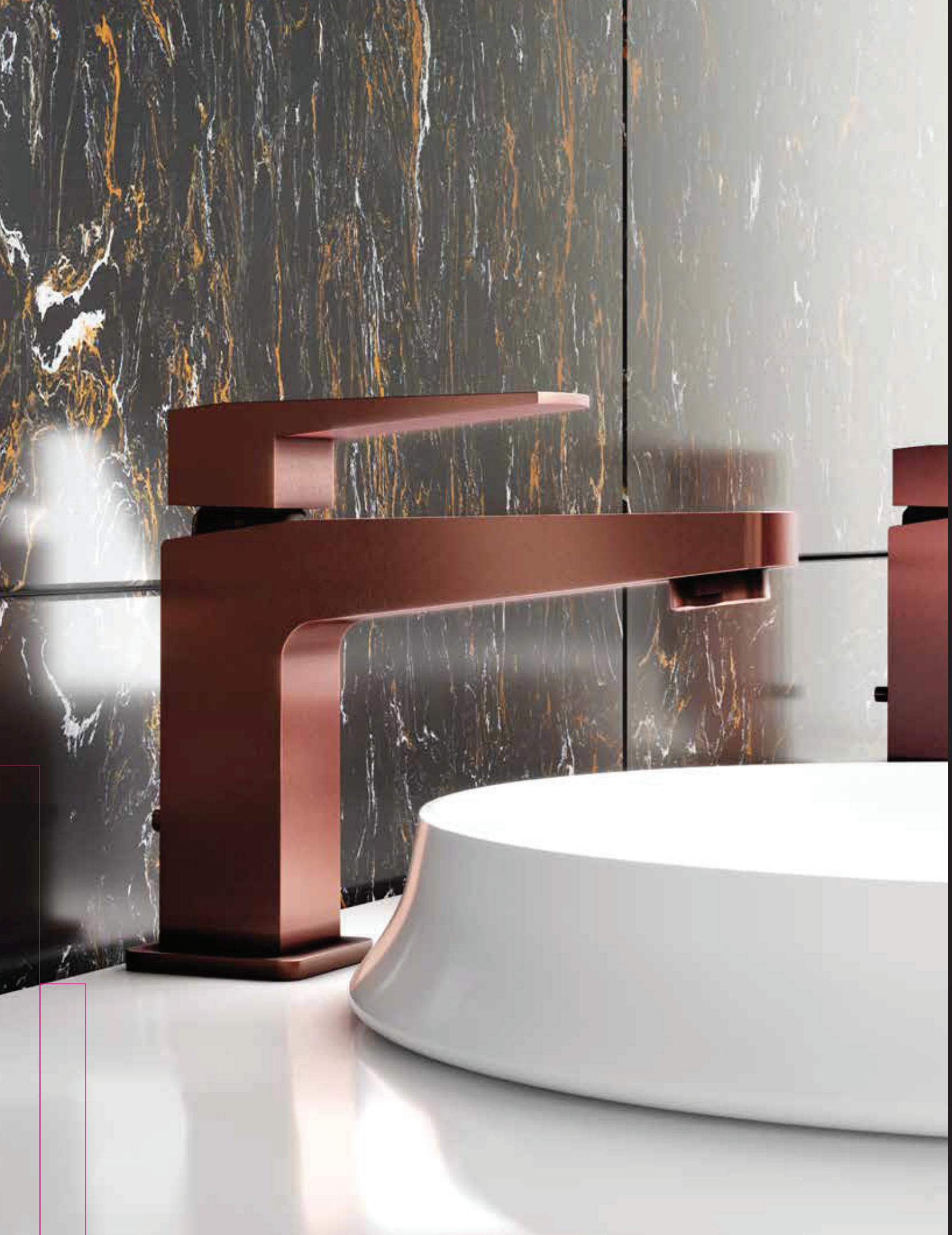

CONTEMPORARY COLLECTION

ECHO

A technicality at the service of sobriety and simplicity that prevails within its preserved environment

SPECIAL FINISHES

43 Echo- Special Order

Single Lever Basin Mixer with Pop-up

Retail Price

102.43.778E2

- Fixed Spout
- ¼-Turn Ceramic Disc
- Flow Rate: 2.2 GPM
- Water Saver at Half Way Point

PC	$550
SC	$795
SG	$795
GM	$795
SN	$795
MB	$795

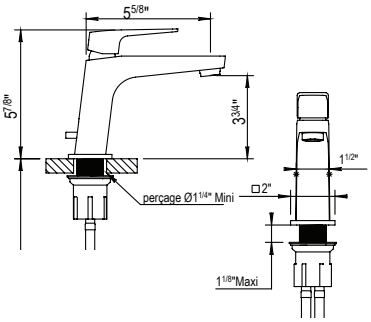

Single Lever Basin Mixer without Pop-up

102.43.789E2

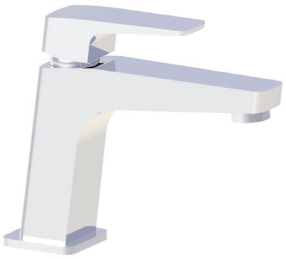

- Fixed Spout
- ¼-Turn Ceramic Disc
- Flow Rate: 2.2 GPM
- Water Saver at Half Way Point

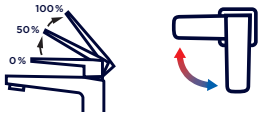

PC	$550
SC	$795
SG	$795
GM	$795
SN	$795
MB	$795

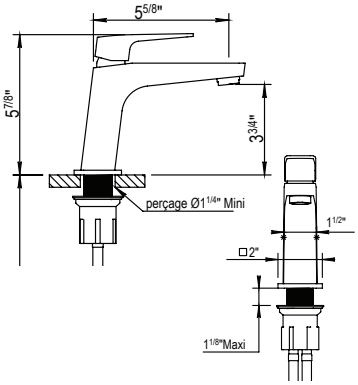

Single Lever Vessel Mixer with Pop-up

102.43.799E2

- Fixed Spout
- ¼-Turn Ceramic Disc
- Flow Rate: 2.2 GPM
- Water Saver at Half Way Point

PC	$750
SC	$1095
SG	$1095
GM	$1095
SN	$1095
MB	$1095

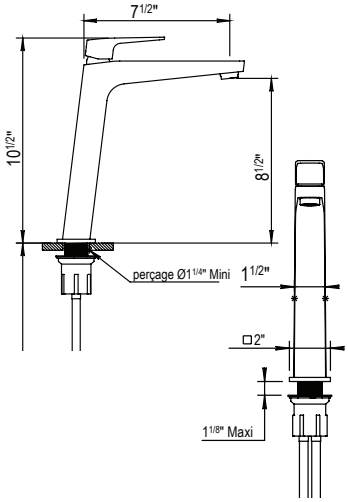

Single Lever Bidet Mixer

102.43.771

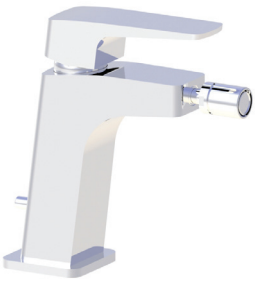

- Fixed Spout
- ¼-Turn Ceramic Disc
- Flow Rate: 2.2 GPM
- Water Saver at Half Way Point

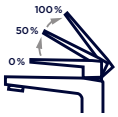

PC	$645
SC	$950
SG	$950
GM	$950
SN	$950
MB	$950

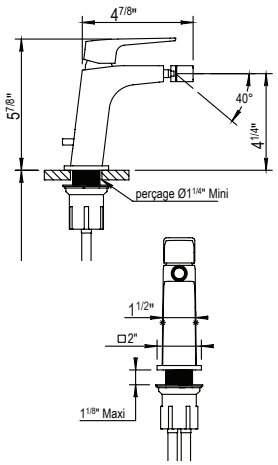

43 Echo- Special Order

Exposed Thermostatic Valve with Handshower

Retail Price

102.43.796

ANTI-SCALE NOZZLES

- Two 1/4-Turn Ceramic Disc Volume Control
- 10” Showerhead
- 60” Handshower Hose
- 3.2 GPM @ 45 PSI
- Showerhead Restrictor Available Upon Request
- Anti-calcium Handshower and Showerhead

PC	$2295
SC	$3495
SG	$3495
GM	$3495
SN	$3495
MB	$3495

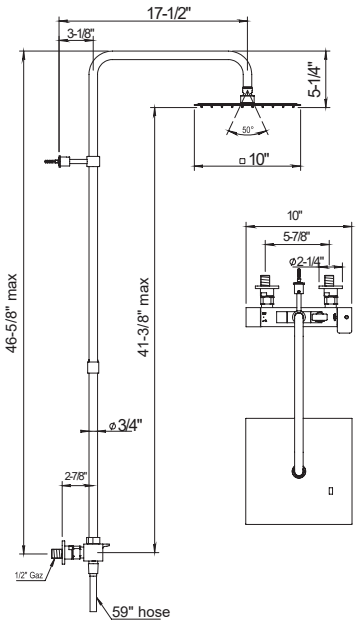

Exposed Thermostatic Wall Mounted Tub Filler with Handshower

102.43.714

CAL GREEN AB1953 COMPLIANT

ANTI-SCALE NOZZLES

- Handshower Holder
- 59” Handshower Hose
- CalGreen Low Flow Aerator Upon Request
- Anti-calcium hands-hower

- Fixed Spout
- 1/4-Turn Ceramic Disc
- 1/2” NPT Connections
- Flow Rate: 5.8 GPM

PC	$1995
SC	$2895
SG	$2895
GM	$2895
SN	$2895
MB	$2895

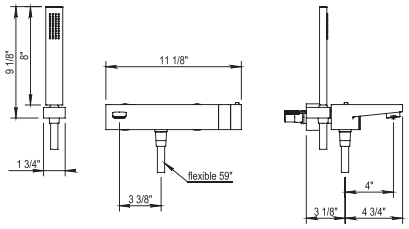

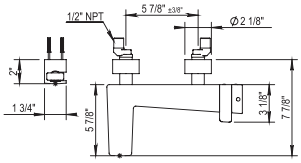

NOTE! This check mark symbol indicates IN STOCK

CONTEMPORARY COLLECTION

NEW WAVE

"PART OF A LARGE OCEAN, BUT REMAINS A SINGLE DROP OF WATER"

One of our company's truly iconic original design.

Nouvelle Vague has become a timeless collection thanks to its refined and resolutely contemporary line.

PC
Chrome

NC
Black Chrome

SPECIAL FINISHES

SC
Satin Copper

SG
Satin Gold

GM
Gun Metal

SN
Satin Nickel

PVD FINISHES

CHPVD
Champagne

PIPVD
Pink

BLPVD
Glossy Black

40 New Wave - Special Order

3-Hole Basin Mixer

Retail Price

100.40.260

- Fixed Spout
- ¼-Turn Ceramic Disc Cartridge
- Flow Rate: 2.2 GPM

PC $1460
NC $1750
SC $2375
SG $2375
GM $2375
SN $2375
CHPVD $2690
PIPVD $2690
BLPVD $2690

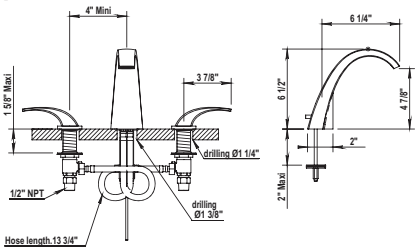

Single Hole Single Lever Basin Mixer

100.40.708

- Fixed Spout
- Flex Hoses
- Ceramic Disc Cartridge
- Flow Rate: 2.2 GPM

PC $1055
NC $1265
SC $1625
SG $1625
GM $1625
SN $1625
CHPVD $1840
PIPVD $1840
BLPVD $1840

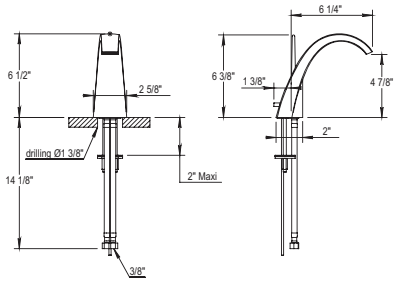

Exposed Thermostatic Valve with Handshower

100.40.550

- 10" Showerhead
- 60" Handshower Hose
- Integrated Fixed Handshower Hook
- ¼-Ceramic Cartridge
- Anti-calcium Handshower and Showerhead
- Showerhead Restrictor Available Upon Request
- 50° rotating ball joint

PC $5645
NC $6595

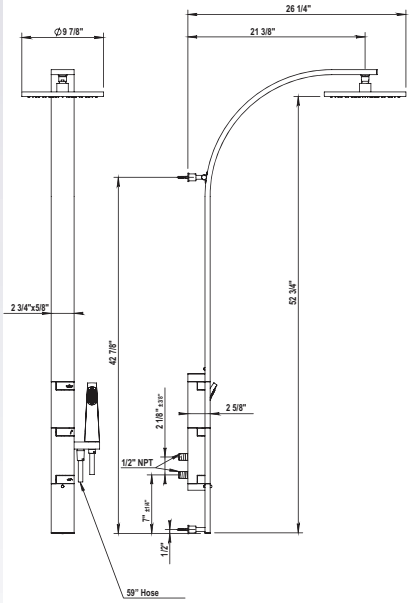

40 New Wave - Special Order

Cascading Tub Spout

Retail Price

100.40.470

- Waterfall Deck Mounted Bath Spout Width 11¼”
- 2 Inlet Supply ½”
- Solid Brass
- Flow Rate: 9 GPM

PC $2670
SC $4515
SG $4515
GM $4515
SN $4515
CHPVD $5120
PIPVD $5120
BLPVD $5120

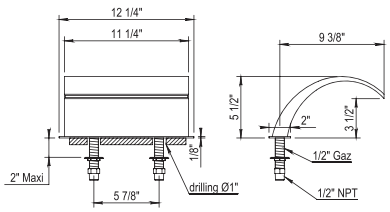

Cascading Tub Spout

100.40.760

- 3 Hole Deck Mounted Bath Mixer
- Waterfall Bath Spout Width 11 ¼”
- Solid Brass
- Flow Rate: 7 GPM

PC $3690
SC $6265
SG $6265
GM $6265
SN $6265
CHPVD $7095
PIPVD $7095
BLPVD $7095

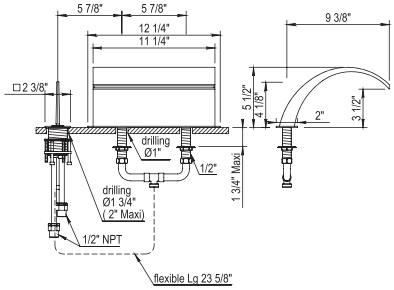

Cascading Tub Spout

100.40.767

ANTI-SCALE NOZZLES

- 5 Hole Deck Mounted Bath Mixer
- Diverter for Hand Shower and Spout
- Waterfall Bath Spout Width 11 ¼”
- 79” Metal Hose
- Flow Rate: 7 GPM
- Anti-calcium Handshower

PC $4790
SC $8105
SG $8105
GM $8105
SN $8105
CHPVD $9185
PIPVD $9185
BLPVD $9185

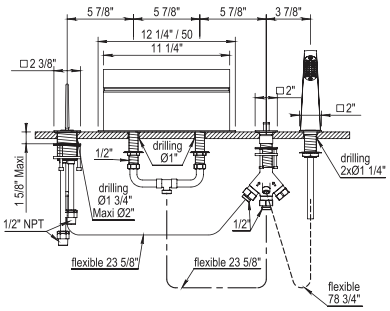

Wall Mounted Tub Filler with Handshower

100.40.714

ANTI-SCALE NOZZLES

- Ceramic Disc Cartridge
- Includes Fixed Handshower Hook and 60” Hose
- Flow Rate: 5.8 GPM
- Anti-calcium Handshower

PC $2670
NC $3205
SC $4350
SG $4350
GM $4350
SN $4350
CHPVD $4930
PIPVD $4930
BLPVD $4930

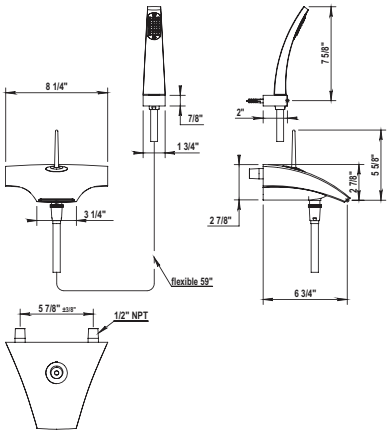

NOTE! This check mark symbol indicates IN STOCK

40 New Wave - Special Order

2-Hole Single Lever Deck Mounted Tubfiller with Handshower

100.40.766

ANTI-SCALE NOZZLES

- Fixed Spout
- Ceramic Disc Cartridge
- Integrated Diverter
- Flow Rate: 4.5 GPM
- Anti-calcium Handshower

Retail Price

PC	$2285
NC	$2605
SC	$3570
SG	$3570
GM	$3570
SN	$3570
CHPVD	$4050
PIPVD	$4050
BLPVD	$4050

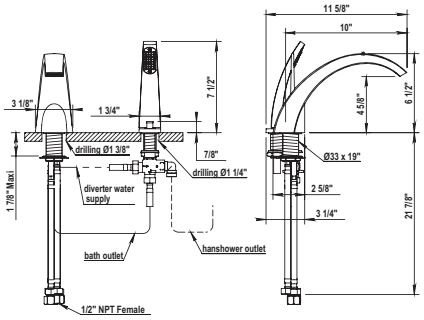

7" Tub Spout

100.40.471

- Solid Brass
- ¾" NPT Female
- Flow Rate: 5.8 GPM

PC	$585
NC	$715
SC	$950
SG	$950
GM	$950
SN	$950
CHPVD	$1075
PIPVD	$1075
BLPVD	$1075

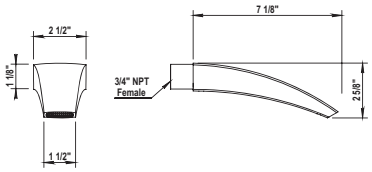

Cascading Tub Spout

100.40.472

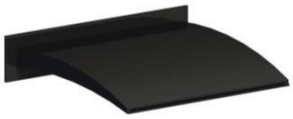

- Solid Brass
- Flow Rate: 6.6 GPM

PC	$1680
NC	$2015
SC	$3155
SG	$3155
GM	$3155
SN	$3155
CHPVD	$3575
PIPVD	$3575
BLPVD	$3575

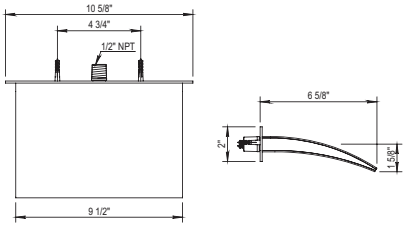

Complete Thermostatic Mixing Valve with Diverter Trim and Rough

100.40.580

- 2 x ¾" NPT Inlets
- 2 x ¾" NPT Outlet
- Safety Stops @ 37°C (99 Fahrenheit)
- 1 Outlet Plug Supplied
- Single Function 2 Way Integrated Diverter
- Integrated Service Stop
- Flow Rate: 14 GPM

PC	$2515
NC	$3025
SC	$4360
SG	$4360
GM	$4360
SN	$4360
CHPVD	$4945
PIPVD	$4945
BLPVD	$4945

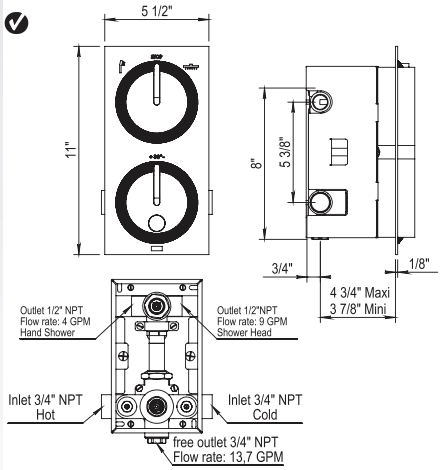

40 New Wave - Special Order

Handshower and Fixed Handshower Holder

Retail Price

100.40.590

- Wall Union
- 59” Metal Hose
- Fixed Handshower Holder
- Anti-calcium Handshower

PC	$840
NC	$985
SC	$1370
SG	$1370
GM	$1370
SN	$1370
CHPVD	$1550
PIPVD	$1550
BLPVD	$1550

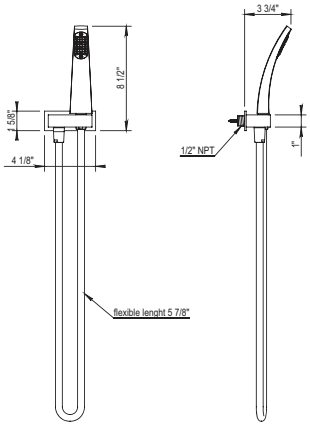

Handshower and Sliding Wall Bar Set

100.40.532

- 30” Sliding Wall Bar
- 59” Metal Hose
- Fixed Handshower Holder
- Anti-calcium Handshower

PC	$1065
SC	$1670
SG	$1670
GM	$1670
SN	$1670
CHPVD	$1895
PIPVD	$1895
BLPVD	$1895

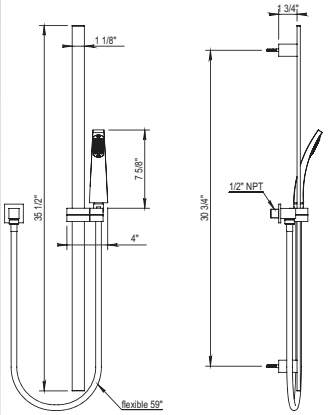

Showerhead with Shower Arm

100.40.535

- 10” Stainless Steel/ Polished Chrome Shower Head with Anti-Calc Picots
- ½” NPT Male Inlet
- Flow Rate: 3.2 GPM @ 45PSI
- Showerhead Restrictor Available Upon Request
- **50° rotating ball joint**

PC	$3740
NC	$4495
SC	$6115
SG	$6115
GM	$6115
SN	$6115
CHPVD	$6930
PIPVD	$6930
BLPVD	$6930

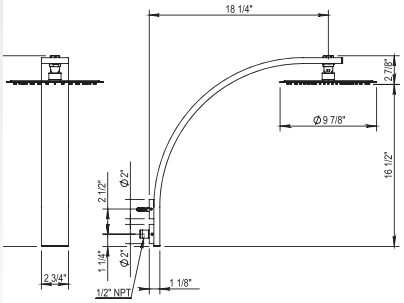

Shower head for PVD and DECO finishes:

Shower

Shower

10.6” Shower Head

B006976

- 10.6” Diameter
- ½” F Connection
- 50° Rotating Ball Joint
- Anti-calcium Showerhead
- Showerhead Restrictor Available Upon Request

Retail Price

PC	$910	✓
PN	$1020	✓
BN	$1230	
UB/AB	$1365	
CB/GB	$1530	
PG/MG	$1795	
PS/AS	$1895	

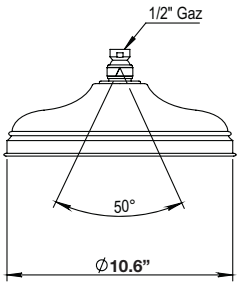

8” Shower Head

100.92.925

- 8” Diameter
- ½” F Connection
- 50° Rotating Ball Joint
- Anti-calcium Showerhead
- Showerhead Restrictor Available Upon Request

PC	$860	✓
PN	$985	✓
BN	$1195	
UB/AB	$1290	
CB/GB	$1460	
PG/MG	$1745	
PS/AS	$1830	

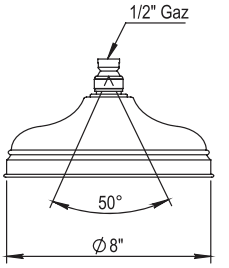

6” Shower Head

100.92.945

- 6” Diameter
- ½” F Connection
- 50° Rotating Ball Joint
- Anti-calcium Showerhead
- Showerhead Restrictor Available Upon Request

PC	$740	✓
PN	$845	✓
BN	$1035	
UB/AB	$1020	
CB/GB	$1255	
PG/MG	$1365	
PS/AS	$1435	

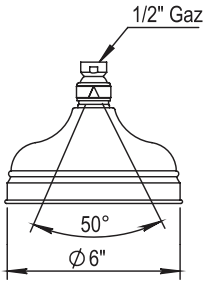

4 1/8” Adjustable Shower Head

100.92.435

- 4 ⅛” Diameter
- ½” F Connection
- 50° Rotating Ball Joint
- Anti-calcium Showerhead
- Showerhead Restrictor Available upon request

PC	$550	✓
PN	$630	✓
BN	$770	
UB/AB	$755	
CB/GB	$935	
PG/MG	$1025	
PS/AS	$1075	

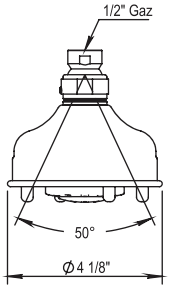

Ceiling Arm

100.92.540

- 5” Ceiling Arm
- ½” NPT Connection

PC	$235	✓
PN	$265	✓
BN	$325	
UB/AB	$320	
CB/GB	$385	
PG/MG	$440	
PS/AS	$455	

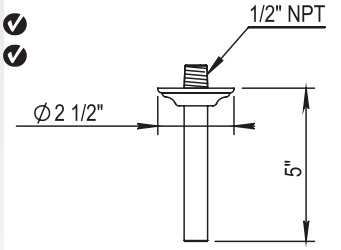

Shower Arm 90°

100.92.926

- 18” Shower Arm
- ½” NPT Connection
- Arm On a 90° Angle

PC	$370	✓
PN	$425	✓
BN	$525	
UB/AB	$510	
CB/GB	$635	
PG/MG	$700	
PS/AS	$730	

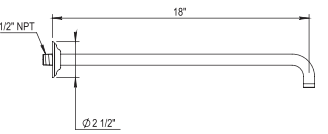

✓ **NOTE!** This check mark symbol indicates IN STOCK

Shower

Angled Shower Arm

100.92.507

- 11.8” Shower Arm
- ½” NPT Connection
- Arm On a 45° Angle

	Retail Price
PC	$350
PN	$400
BN	$485
UB/AB	$510
CB/GB	$585
PG/MG	$700
PS/AS	$730

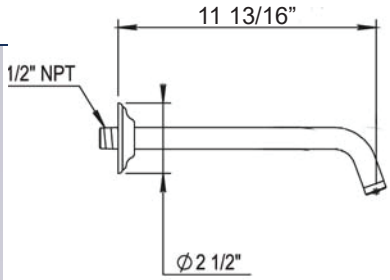

Shower Arm 45°

102.92.960

- 7” Shower Arm
- ½” NPT Connection
- Arm On a 45° Angle

	Retail Price
PC	$370
PN	$425
BN	$525
UB/AB	$510
CB/GB	$635
PG/MG	$700
PS/AS	$730

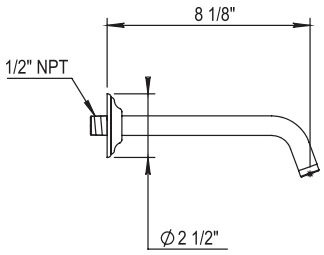

Massage Body Spray

100.00.573

- ½” NPT Adapter Connection
- Anti-calcium Handshower

	Retail Price
PC	$215
PN	$245
BN	$305
UB/AB	$325
CB/GB	$345
PG/MG	$415
PS/AS	$435

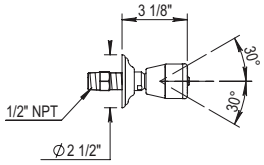

10” Contemporary Picot Showerhead with Shower Arm

100.40.536

- 10” Stainless Steel/ Polished Chrome Shower Head With Anti-Calc Picots
- ½” NPT Connection
- Flow Rate: 3.2 GPM @45PSI
- Showerhead Restrictor Available Upon Request
- **50° rotating ball joint**

	Retail Price
PC	$840
NC	$985

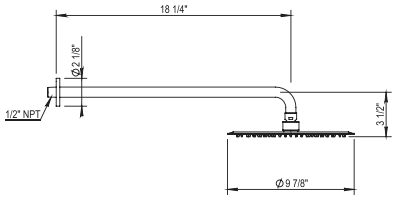

10” Contemporary Picot Showerhead with Ceiling Arm

100.40.540

- 10” Stainless Steel/ Polished Chrome Shower Head With Anti-Calc Picots
- ½” NPT Connection
- Flow Rate: 3.2 GPM @45PSI
- Showerhead Restrictor Available Upon Request
- **50° rotating ball joint**

	Retail Price
PC	$720
NC	$865

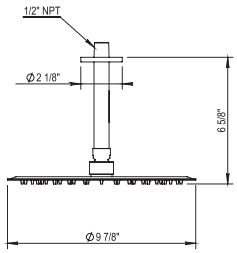

Shower

12” Contemporary Picot Showerhead

Retail Price

100.40.534

- 12” Stainless Steel/ Polished Chrome Shower Head “Racquet” With Anti-Calc Picots
- ½” NPT Connection
- Flow Rate: 3.2 GPM @ 45PSI
- Showerhead Restrictor Available Upon Request

PC $2205

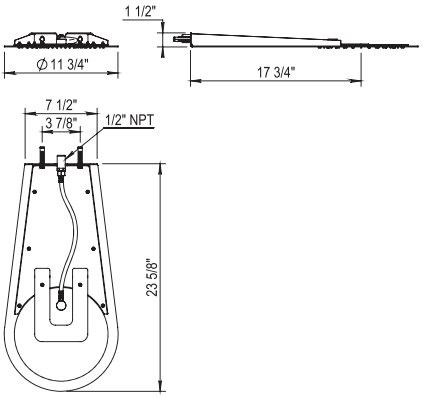

9” x 13” Contemporary Picot Showerhead with Ceiling Arm

B06409

- Rectangular Stainless Steel/Polished Chrome Shower Head With Anti-Calc Picots
- ½” NPT Connection
- Flow Rate: 3.2 GPM @ 45PSI
- Showerhead Restrictor Available Upon Request
- 50° rotating ball joint

PC $1045

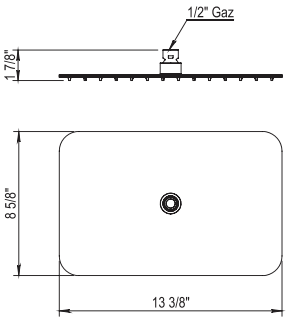

Concealed Body Sprays with Rain Jet Function

100.40.533

- ½” Female NPT Inlet
- 1.05 GPM
- Rough Not Available separately
- Able To Pivot In Any Direction

PC $295

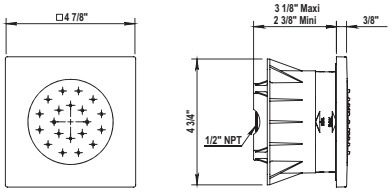

NOTE! This check mark symbol indicates IN STOCK

Kitchen

Kitchen Mixers

Emily Single Lever Kitchen Faucet

Retail Price

100.01.703

- Swivel Spout
- Ceramic Disc Cartridge
- Flow Rate: 2.2 GPM
- All Metal Lever Handle Available
- Drain Is Not Included
- Lift And Turn Drain Available On Request
- CalGreen Low Flow Aerator and Low Lead Available

PC $1165
PN $1220
BN $1355
UB/AB $1645
CB/GB $2040
PG/MG $2250
PS/AS $2345

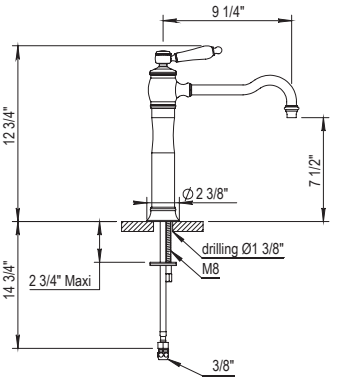

Emily Single Lever Kitchen Faucet

100.02.703

- Swivel Spout
- Ceramic Disc Cartridge
- Flow Rate: 2.2 GPM
- All Metal Lever Handle Available
- Drain Is Not Included
- Lift And Turn Drain Available On Request
- CalGreen Low Flow Aerator and Low Lead Available

PC $1165
PN $1220
BN $1355
UB/AB $1645
CB/GB $2040
PG/MG $2250
PS/AS $2345

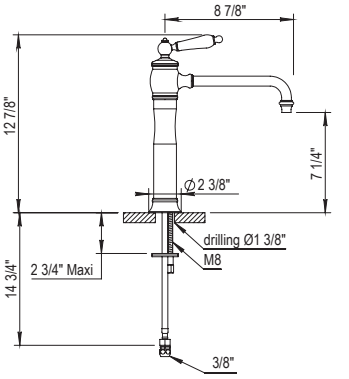

Emily Single Lever Kitchen Faucet with Side Spray

100.01.723

- Swivel Spout
- Ceramic Disc Cartridge
- Flow Rate: 2.2 GPM
- 47" Spray Hose
- All Metal Lever Handle Available
- Vacuum Breaker Included
  In Hand Held
- CalGreen Low Flow Aerator and Low Lead Available

PC $1860 ✔
PN $1920 ✔
BN $2040
UB/AB $2570
CB/GB $3185
PG/MG $3525
PS/AS $3655

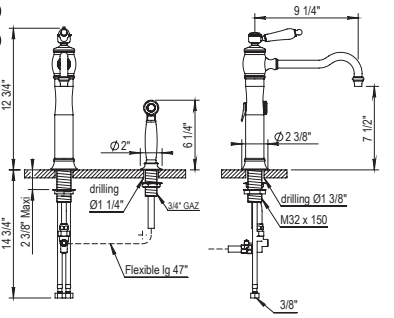

Emily Single Lever Kitchen Faucet with Side Spray

100.02.723

- Swivel Spout
- Ceramic Disc Cartridge
- Flow Rate: 2.2 GPM
- 47" Spray Hose
- All Metal Lever Handle Available
- Vacuum Breaker Included in hand held
- CalGreen Low Flow Aerator and Low Lead Available

PC $1725 ✔
PN $1785 ✔
BN $2040
UB/AB $2570
CB/GB $3185
PG/MG $3525
PS/AS $3655

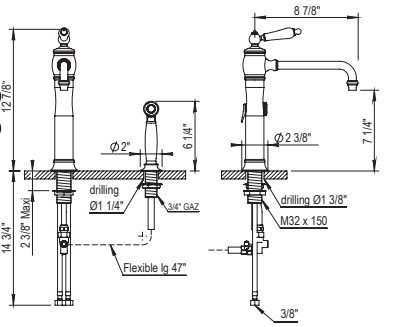

✔ **NOTE!** This check mark symbol indicates IN STOCK

Kitchen Mixers

2-Hole Gooseneck Bridge Kitchen Faucet

Retail Price

102.28.121

- Swivel Spout
- ¼-Turn Ceramic Disc
- Spout Reach: 7 7/8"
- Flow Rate: 2.2 GPM
- Side Spray not Available

PC $930
PN $1045
BN $1165
UB/AB $1330
CB/GB $1630
PG/MG $1805
PS/AS $1880

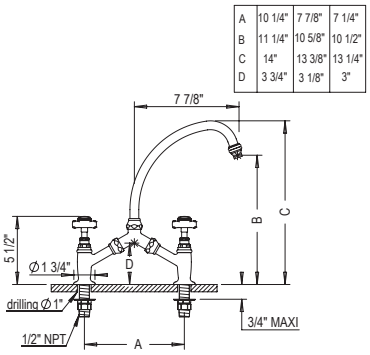

Single Hole Gooseneck Kitchen Faucet

102.28.133

- Swivel Spout
- ¼-Turn Ceramic Disc
- Flow Rate: 2.2 GPM
- Side Spray not Available

PC $1025
PN $1075
BN $1195
UB/AB $1470
CB/GB $1820
PG/MG $2010
PS/AS $2085

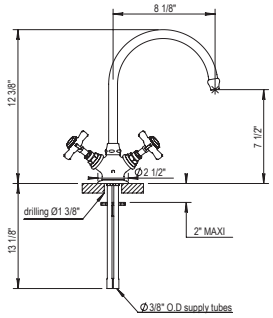

2-Hole Gooseneck Bridge Kitchen Faucet

102.07.141

102.50.141

- Swivel Spout
- ¼-Turn Ceramic Disc
- 7 7/8" Centers ± 2 1/8"
- Flow Rate: 2.2 GPM
- Side Spray not Available

PC $1355
PN $1410
BN $1500
UB/AB $1880
CB/GB $2305
PG/MG $2550
PS/AS $2665

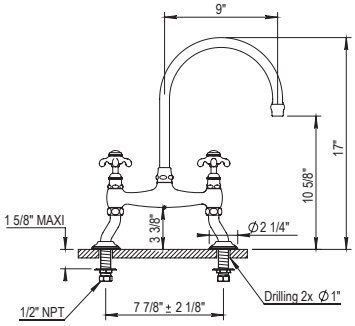

2-Hole Gooseneck Bridge Kitchen Faucet

102.07.101

102.50.101

- Swivel Spout
- ¼-Turn Ceramic Disc
- Spout Reach: 9 ¼"
- Flow Rate: 2.2 GPM
- Side Spray not Available
- CalGreen Low Flow Aerator and Low Lead Available upon Request

PC $1655
PN $1745
BN $1880
UB/AB $2290
CB/GB $2815
PG/MG $3085
PS/AS $3245

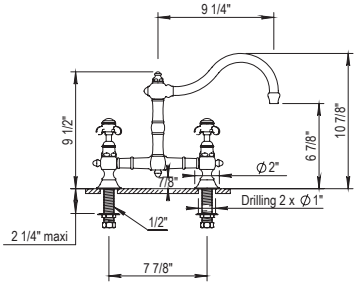

3-Hole Wall Mounted Kitchen Faucet

102.07.164

102.50.164

- Swivel Spout
- ¼-Turn Ceramic Disc
- Spout: ½" Female NPT
- Flow Rate: 2.2 GPM
- Roughs Available: Ref 100.92.046BT & 100.92.048BT (Page 32)
- Side Spray not Available

PC $1585
PN $1660
BN $1790
UB/AB $2190
CB/GB $2695
PG/MG $2975
PS/AS $3085

Trim Only available: i.e. 102.07.164PN-**TO**
Deduct $320 from complete list for Trim only Pricing

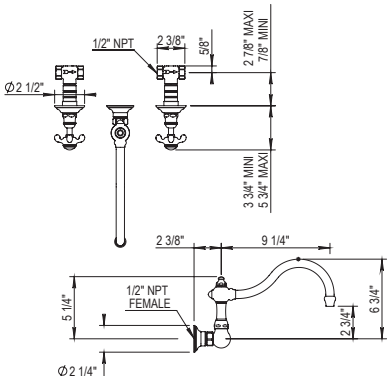

Kitchen Mixers

Single Hole Two-Handle Kitchen Faucet

102.07.103

- Swivel Spout
- ¼-Turn Ceramic Disc
- Flow Rate: 2.2 GPM
- Side Spray not Available
- CalGreen Low Flow Aerator and Low Lead Available Upon Request

Retail Price

PC	$1290
PN	$1345
BN	$1445
UB/AB	$1775
CB/GB	$2190
PG/MG	$2420
PS/AS	$2525

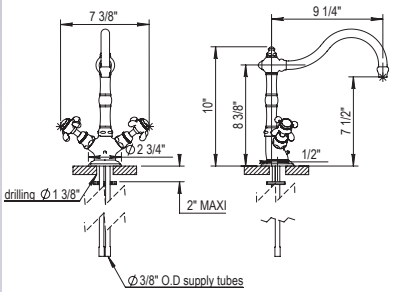

Single Hole Two-Handle Bar Faucet

102.07.139

- Swivel Spout
- 1/4-Turn Ceramic Disc
- Flow Rate: 2.2 GPM
- Side Spray not Available
- CalGreen Low Flow Aerator and Low Lead Available Upon Request

PC	$1290
PN	$1345
BN	$1445
UB/AB	$1775
CB/GB	$2190
PG/MG	$2420
PS/AS	$2525

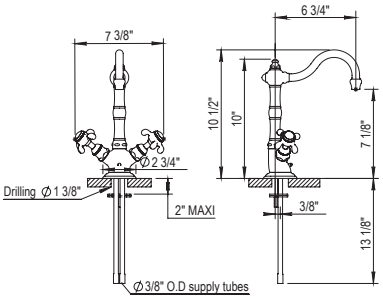

Single Hole Two-Handle Gooseneck Kitchen Faucet

102.07.133

- Swivel Spout
- 1/4-Turn Ceramic Disc
- Flow Rate: 2.2 GPM
- Side Spray not Available
- CalGreen Low Flow Aerator and Low Lead Available upon Request

PC	$915
PN	$975
BN	$1075
UB/AB	$1260
CB/GB	$1555
PG/MG	$1720
PS/AS	$1790

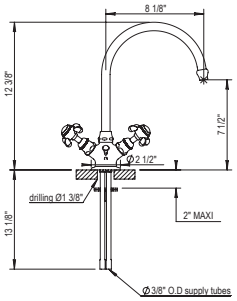

Single Hole Two-Handle Kitchen Faucet with Side Spray

102.07.123

- Swivel Spout
- 1/4-Turn Ceramic Disc
- Flow Rate: 2.2 GPM
- 47” Spray Hose
- Vacuum Breaker Included in Hand Held
- CalGreen Low Flow Aerator and Low Lead Available Upon Request

PC	$1985
PN	$2055
BN	$2185
UB/AB	$2750
CB/GB	$3375
PG/MG	$3730
PS/AS	$3900

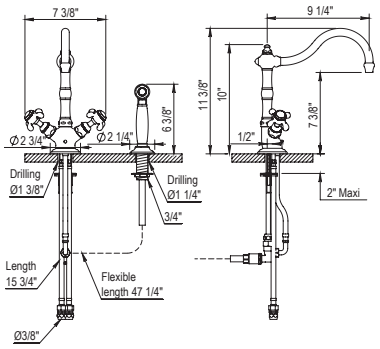

Kitchen Mixers

3-Hole Kitchen Faucet with Side Spray

102.07.124

102.50.124

- Swivel Spout
- ¼-Turn Ceramic Disc
- Flow Rate: 2.2 GPM
- 47" Spray Hose
- Vacuum Breaker Included in Hand Held
- CalGreen Low Flow Aerator and Low Lead Available upon Request

Retail Price

PC	$2200
PN	$2285
BN	$2420
UB/AB	$3040
CB/GB	$3745
PG/MG	$4115
PS/AS	$4320

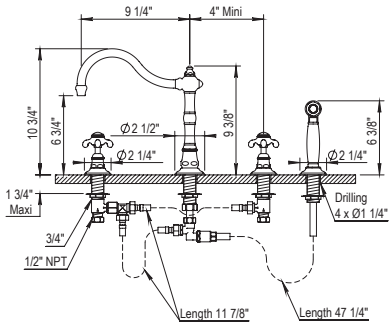

2-Hole Gooseneck Bridge Kitchen Faucet

102.66.141

160.67.141

161.67.141

162.67.141

- Swivel Spout
- ¼-Turn Ceramic Disc
- 7 7/8" Centers ± 2 1/8"
- Flow Rate: 2.2 GPM
- Side Spray not Available

PC	$1355
PN	$1410
BN	$1500
UB/AB	$1880
CB/GB	$2305
PG/MG	$2550
PS/AS	$2665

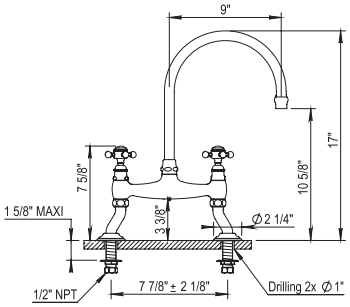

2-Hole Gooseneck Bridge Kitchen Faucet

102.66.101

160.67.101

161.67.101

162.67.101

- Swivel Spout
- ¼-Turn Ceramic Disc
- Spout Reach: 9 ¼"
- Flow Rate: 2.2 GPM
- Side Spray not Available
- CalGreen Low Flow Aerator and Low Lead Available Upon Request

PC	$1655
PN	$1745
BN	$1880
UB/AB	$2290
CB/GB	$2815
PG/MG	$3085
PS/AS	$3245

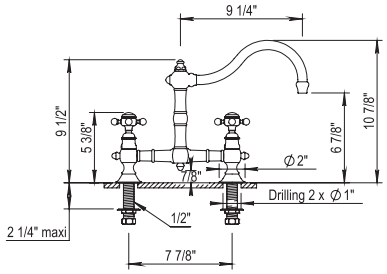

3-Hole Wall Mounted Kitchen Faucet

102.66.164

160.67.164

161.67.164

162.67.164

- Swivel Spout
- ¼-Turn Ceramic Disc
- Spout: ½" Female NPT
- Flow Rate: 2.2 GPM
- Roughs Available Ahead. Ref 100.92.046BT And 100.92.048BT That Can Be Found On Page 32
- Side Spray not Available

Trim Only available: i.e. 102.07.164PN-**TO**
Deduct $320 from complete list for Trim only Pricing

PC	$1585
PN	$1660
BN	$1790
UB/AB	$2190
CB/GB	$2695
PG/MG	$2975
PS/AS	$3085

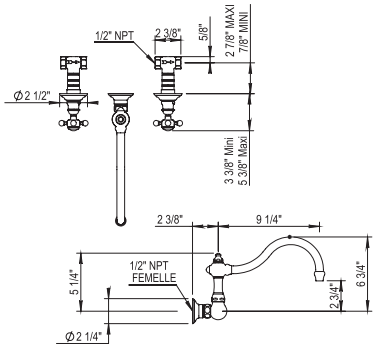

Single Hole Two-Handle Kitchen Faucet

102.66.103

- Swivel Spout
- ¼-Turn Ceramic Disc
- Flow Rate: 2.2 GPM
- Side Spray not Available

PC	$1290
PN	$1345
BN	$1445
UB/AB	$1775
CB/GB	$2190
PG/MG	$2420
PS/AS	$2525

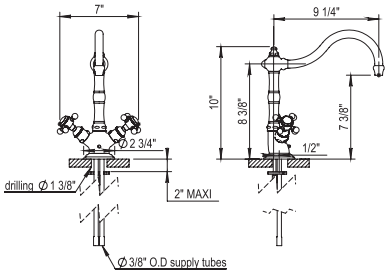

Kitchen Mixers

Single Hole Two-Handle Bar Faucet

Retail Price

102.66.139

- Swivel Spout
- ¼-Turn Ceramic Disc
- Flow Rate: 2.2 GPM
- Side Spray not Available

PC	$1290
PN	$1345
BN	$1445
UB/AB	$1805
CB/GB	$2190
PG/MG	$2420
PS/AS	$2525

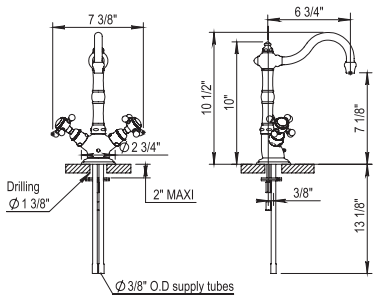

Single Hole Two-Handle Gooseneck Kitchen Faucet

102.66.133

- Swivel Spout
- ¼-Turn Ceramic Disc
- Flow Rate: 2.2 GPM
- Side Spray not Available

PC	$915
PN	$975
BN	$1075
UB/AB	$1260
CB/GB	$1555
PG/MG	$1700
PS/AS	$1775

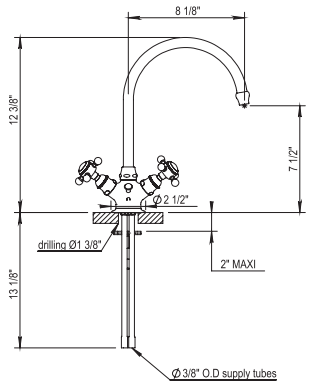

Single Hole Two-Handle Kitchen Faucet with Side Spray

102.66.123

- Swivel Spout
- ¼-Turn Ceramic Disc
- Flow Rate: 2.2 GPM
- 47" Spray Hose
- Vacuum Breaker Included in Handheld

PC	$1985
PN	$2055
BN	$2185
UB/AB	$2730
CB/GB	$3285
PG/MG	$3760
PS/AS	$3900

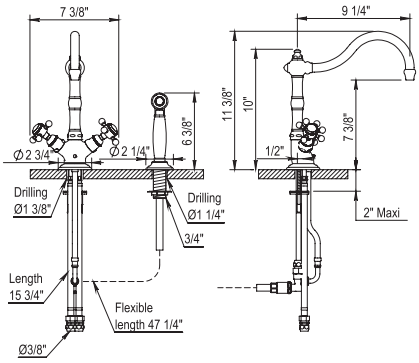

3-Hole Kitchen Faucet with Side Spray

102.66.124

160.67.124

161.67.124

162.67.124

- Swivel Spout
- ¼-Turn Ceramic Disc
- Flow Rate: 2.2 GPM
- 47" Spray Hose
- Vacuum Breaker Included in Handheld

PC	$2200
PN	$2285
BN	$2420
UB/AB	$3040
CB/GB	$3745
PG/MG	$4115
PS/AS	$4320

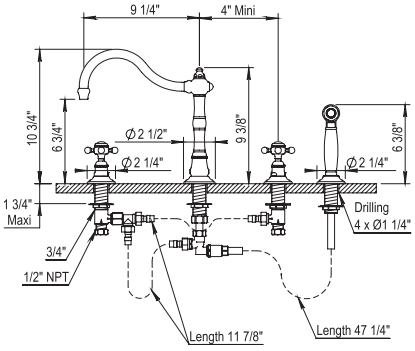

62 | 65 Ascott

Single Lever Kitchen Mixer

Retail Price

102.65.703

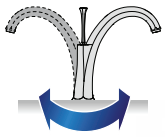

Orientable sur 160°
Directional on 160°

- Swivel Spout
- No Waste
- Flexible hoses
- Flow rate: 2.2 GPM

PC	$1210
PN	$1270
BN	$1360
UB/AB	$1790
CB/GB	$2060
PG/MG	$2195
PS / AS	$2295

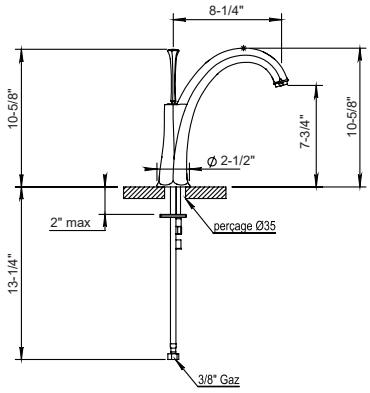

Kitchen Mixer with Handspray

102.81.704

- Solid Brass
- Flow rate: 2.2 GPM

SS	$2450
COP	$3675
BG	$3675
GM	$3675

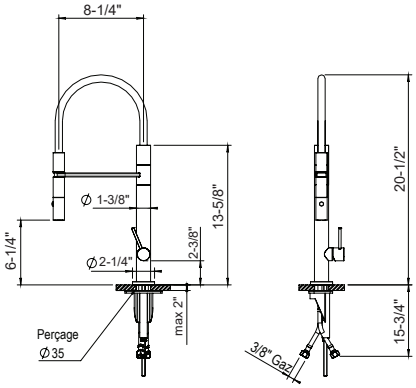

Kitchen Mixer with Swivel Spout

102.81.723

- Solid Brass
- Flow rate: 2.2 GPM

SS	$1275
COP	$2025
BG	$2025
GM	$2025

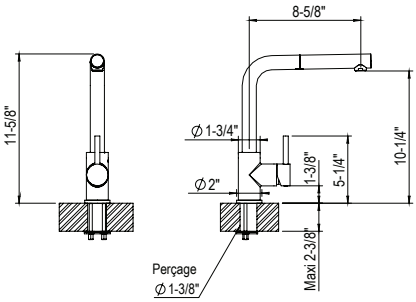

PVD FINISHES

SS
Stainless Steel

COP
Pink Copper

BG
Brushed Gold

GM
Gun Metal

Replacement Parts

Replacement Parts

			Retail Price		
HOP92.410		Porcelain Chaud Cap For Montmartre And St. Germain Series	PC	$20	✓
HOP92.411		Porcelain Froid Cap For Montmartre And St. Germain Series	PC	$20	✓
HOP92.412		Porcelain Thermostatic/Volume Control Cap For Montmartre And St. Germain Series	PC	$20	✓
HOP92.940		Porcelain Cap Holder In 2 Parts Without Caps For Montmartre / St. Germain Series Consists of Decorative Ring And Brass Ring	PC PN BN UB/AB CB/GB PG/MG PS/AS	$25 $30 $32 $34 $35 $38 $40	✓ ✓ ✓
HOP92.031		Porcelain Chaud Cap For Dover/Ascott Series	PC	$20	✓
HOP92.032		Porcelain Froid Cap For Dover/Ascott Series	PC	$20	✓
HOP92.037		Porcelain Thermostatic / Volume Control Cap For Dover / Ascott Series	PC	$20	✓
HOP92.004		Porcelain Cap Holder In 2 Parts Without Caps For Dover Collection. Consists For Decorative Ring and Brass Ring	PC PN BN UB/AB CB/GB PG/MG PS/AS	$25 $30 $35 $40 $45 $50 $55	✓ ✓ ✓
HOPB00.4912		Metal blank cap	PC PN BN UB/AB CB/GB PG/MG PS/AS	$55 $60 $60 $60 $60 $60 $60	✓ ✓
HOPB00.4913		Metal cap “C” for Cold. Available in All finishes			
HOPB00.4914		Metal cap “H” for Hot. Available in All finishes			
HOP6312BT		Cartridge for mixing valve Réf. 92.585 / 92.591 / 92.592 / 92.593 / 92.595 / 92.597 /40.526 / 40. 580 / 40.581 / 65.745 produced after 01/2017	BT	$205	✓

Replacement Parts

			Retail Price
HOP93.201BT		Handle - Washer - Cup for 65.708	**PC** $105 **PN** $115 **BN** $118 **UB/AB** $170 **CB/GB** $175 **PG/MG** $210 **PS/AS** $219
HOP92.118BT.L		Cartridge ½" Stem Length ¾" Closing on the Left For All Standard 3-Hole Faucets And 4 Hole Kitchen Faucets	**BT** $95 ✓
HOP92.118BT.R		Cartridge ½" Stem Length ¾" Closing On The Right For All Standard 3-Hole Faucets And 4 Hole Kitchen Faucets	**BT** $95 ✓
HOP92.026BT		Cartridge ½" Closing On The Right, Stem Length 3" For 100.92.046Bt And All Wall Mounted Faucets.	**BT** $105 ✓
HOP92.126BT		Cartridge ½" Closing On The Left, Stem Length 3" For 100.92.048Bt And All Wall Mounted Faucets.	**BT** $105 ✓
HOP92.149BT.L		Cartridge ¾", Stem ¾" Closing On The Left For All Tub Fillers Ending In Numbers 464, 434, 435, 498	**BT** $95 ✓
HOP92.149BT.R+		Cartridge ¾", Stem ¾" Closing on the Right For All Tub Fillers Ending In Numbers 464, 434, 435, 498	**BT** $95 ✓
HOP92.027BT		Cartridge ¾" Closing On The Right, Stem Length 3" for a 100.92.047BT (Stem Can Be Cut To Size)	**BT** $120 ✓
HOP92.127BT		Cartridge ¾" Closing On The Left, Stem Length 3" for a 100.92.049BT (Stem Can Be Cut To Size)	**BT** $120 ✓
HOP92.280BT		Cartridge for Petra Faucet 102.37/39.708 and 102.37/39.719	**BT** $105

✓ **NOTE!** This check mark symbol indicates IN STOCK

Replacement Parts

			Retail Price
HOP92.953BT		Cartridge And Chrome Handle for New Wave Faucet 100.40.708	**PC** $260
HOP92.561BT		Cartridge for Thermostatic Mixing Valve 102.92.319BT	**BT** $455
HOP92.999BT		Cartridge for Thermostatic Mixing Valve 102.92.524BT	**BT** $1310
HOPB00.6077BT		Cartridge for Thermostatic Mixing Valve 100.92.591BT, 100.92.593BT, 100.92.599BT 100.92.595BT	**BT** $225
HOP92.788BT		Thermostatic Cartridge For Montmartre/St. Germain Exposed Showers Ending in 744/754	**BT** $390
HOP92.553BT		Volume Control Cartridge For Montmartre/St. Germain Exposed Showers Ending in 744/754 2 PIECES	**BT** $125
HOP92.280BT		Cartridge for réf. --.708 / --.711 / --.700 / --.706 / --.718 / --.719 / --.766 / --.765 For Series 30/31/37/39/47/49/83	**BT** $55
HOP5360BT		Cartridge for Réf. 01.708 / 01.703 / 01.723 / 01.719 / 02.708 /02.703 / 02.723 / 02.719	**BT** $55
HOP6213BT		Cartridge for mixing valve Ref. 65.708	**BT** $50
HOP100.92.163BT		Diverter Kit for Single Hole Kitchen Faucets with Side Spray for 102.07/50.123 and similar St. Germain Kitchen Faucets	**BT** $170

Replacement Parts

			Retail Price	
HOP100.92.164BT		Diverter Kit for Three Hole Kitchen Faucets with Side Spray for 102.07/50.124 and similar St. Germain Kitchen Faucets	**BT** $225	
HOP92.812BA		White Plastic Adaptor for Volume and Thermostatic Control Trims	**BA** $9	✓
HOP92.011BT		Aerator 3/8” for Montmartre and Dover Faucets	**BT** $15	✓
HOP92.206		Complete Housing and Aerator 3/8” for Montmartre and Dover Faucets + Finish	**PC** $70 **PN** $70 **BN** $70 **UB/AB** $70 **CB/GB** $70 **PG/MG** $70 **PS/AS** $75	
HOP92.994BT		8” Extension Kit for 100.92.553BT/100.92.599BT thermostatic. Can be cut to size.	**BT** $370	✓
HOP92.034BT 11/2”		Extension 3 Part Kit 1 1/2” for Volume Control Roughs 100.92.046, 047, 048, 049BT Cannot be Cut to Size	**BT** $125	✓
HOP92.032BT 3/4”		Extension 3 Part Kit 3/4” for Volume Control Roughs 100.92.046, 047, 048, 049BT Cannot be Cut to Size	**BT** $135	✓
HOP92.092BT 3/4”		Extension kit 3/4” for 92.597	**BT** $675	✓
HOP92.093BT 3/4”		Extension kit 3/4” for 92.583	**BT** $765	
HOP93.994BT 3/4”		Extension kit 3/4” for 92.584	**BT** $395	
HOP92.023		Lift & Turn drain used with 01.703/02.703	**PC** $120 **PN** $130 **BN** $140 **UB/AB** $185 **CB/GB** $190 **PG/MG** $200 **PS/AS** $215	

✓ **NOTE!** This check mark symbol indicates IN STOCK

Replacement Parts

		Retail Price
HOP150.92.110	Complete Anti-Calc Retro Hand Spray with All Metal Handle + Finish	**PC** $385 **PN** $395 **BN** $415 **UB/AB** $530 **CB/GB** $605 **PG/MG** $715 **PS/AS** $745
HOP92.110	Complete Anti-Calc Retro Hand Spray with Porcelain Handle + Finish	**PC** $365 ✓ **PN** $375 ✓ **BN** $395 **UB/AB** $505 **CB/GB** $575 **PG/MG** $680 **PS/AS** $705
102.07.472	Deck bath spout 9.5” • Fixed Spout with Integrated Diverter • Includes T Connections	**PC** $820 **PN** $855 **BN** $895 **UB/AB** $1205 **CB/GB** $1365 **PG/MG** $1635 **PS/AS** $1700
102.07.478 **102.50.478**	3/4” Deck Valve (Right) • Complete Rough and Trim • 1/4 Turn Ceramic Disc	
102.07.479 **102.50.479**	3/4” Deck Valve (Left) • Complete Rough and Trim • 1/4 Turn Ceramic Disc	**PC** $490 **PN** $505 **BN** $525 **UB/AB** $715 **CB/GB** $810 **PG/MG** $975 **PS/AS** $1015
102.66.478 **160.67.478** **161.67.478** **162.67.478**	3/4” Deck Valve (Right) • Complete Rough and Trim • 1/4 Turn Ceramic Disc	
102.66.479 **160.67.479** **161.67.479** **162.67.479**	3/4” Deck Valve (Left) • Complete Rough and Trim • 1/4 Turn Ceramic Disc	
HOP92.995BT	8” Extension Kit for 102.92.524BT, 102.92.319/591BT, Can Be Cut To Size	**BT** $235 ✓
HOP92.998BT	Standard Axis Kit 2 3/8” for 102.92.524/591BT	**BT** $150 ✓

Replacement Parts

			Retail Price	
HOP92.015		Stopper And Adapter For Horus Drains	**PC** $85 ✓ **PN** $95 ✓ **BN** $125 **UB/AB** $170 **CB/GB** $179 **PG/MG** $195 **PS/AS** $205	
HOP00.465		Hose for Hand Shower for 102.07/50.464 + Finish	**PC** $155 **PN** $180 **BN** $210 **UB/AB** $235 **CB/GB** $475 **PG/MG** $510 **PS/AS** $540	
HOP00.585		Hose for the 102.01.589, 102.01.532 + Finish	**PC** $155 ✓ **PN** $180 ✓ **BN** $215 ✓ **UB/AB** $250 **CB/GB** $440 **PG/MG** $450 **PS/AS** $495	
HOP92.250PC		Spray Hose 1.25m for Kitchen Faucet side spray	**PC** $180 ✓	
HOP92.249		Side Spray for Montmartre & St. Germain Kitchen Faucets + Finish	**PC** $280 ✓ **PN** $295 ✓ **BN** $305 **UB/AB** $440 **CB/GB** $465 **PG/MG** $490 **PS/AS** $510	
HOP92.111PC		Porcelain Handle for Handspray	**PC** $20	
HOP92.121PC		Porcelaine handle for Victoria or diverter handle to bath / shower 01.414 and 01.180 handle	**PC** $20	
HOP92.123BT		“T” part for 3 hole automatic 01.414 and 01.180 handle	**BT** $80	

✓ **NOTE!** This check mark symbol indicates IN STOCK

HORUS

Quality & Workmanship

Raw Material

Rough components used for the making of HORUS taps are made of solid brass, which is an alloy of copper and zinc. According to their characteristics and their manufacturing processes, the rough components are realized through different techniques: especially casting, die stamping, and screw cutting.

Then, each component must be polished, usually by hand, in order to obtain a perfectly smooth rough component, without any unevenness, ready to get the surfacing which will give it its final shade. A close handmade control is then done before the finishes itself.

Finishes

HORUS offers his customers the largest possible choice of finishing shades, in order to allow private customers, architects and interior designers…to decorate on demand the fittings finishes as best as possible according to the style of the bathroom or the kitchen. The finishes are made on each component before assembling the complete tap set.

The most usual finishes for taps and fittings is chrome coating. This lightly blue glint finish is obtained by soaking rough components into several baths, by electrolysis.

Chrome, a tough and stainless metal, brings protecting qualities to the coating thus obtained. Shiny or mat nickel finishes, which have slightly different shades from the chrome ones, are obtained by electrolysis as well. The process is the same for gold coating which is realised on request only.

The chrome and nickel finishes are procuded in series, and the most usual references of HORUS ranges are usually stock available, which allows a short delivery.

Other finishes, named decoration finishes, are obtained through a different process. It doesn't consist in a coating on the rough piece, but in a reaction on the rough piece itself caused by soaking it into an acid bath, thus changing its outer aspect.

This process is of course handmade: it's a tricky operation, the result of which depends at the same time on the content of the bath, the characteristics of the piece, the temperature and hydrothermal conditions of the hall, the time of soaking…These conditions demand a sharp skill and experience.

The components are usually given a shiny or mat glaze, then put in oven in order to protect their surfaces from the constraints they will have to stand.

Maintenance

Water usually contains limestone and mineral residues that settle on the taps surfaces after water has evaporated. Some marks of products such as toothpaste, cosmetics, fruits, acid vegetables or even wine could damage the coating.

The handmade characteristics of these tricky successive operations make each HORUS tap set to be a unique article with very specific shades. These shades should be kept undamaged for a long time thanks to a day after day maintenance, carefully carried out without any aggressive or abrasive cleaning product. Chlorine and bleach are luxury taps and fitting enemies. Acid, ammonia and soda should not be used either. Scourers, scouring powders and disinfectant must be avoided as well.

The best is to daily clean the taps with water and soap, then wipe them with a smooth duster such as soft damp cloth or micro fibre. Moreover, this method is economic and respects environment.

The use of DECAL, anti limestone cleaner for taps, gets the cleaning of surfaces much easier. DECAL could be used for every HORUS finishes and protects your taps against mineral residues present in every sanitary facilities.
DECAL can be used as often as necessary.

Décal - 250 ml
Anti limestone cleaner
for bath fixture
Réf. B005268PE

HORUS Quality

Specialized in the manufacturing of faucet factory top-of-the-range market since 1980, HORUS has chosen déliberement the quality for philosophy of company.

From the conception of a product to its manufacturing, HORUS pursues a requirement of absolute quality: components handled in the mass, suppliers selected according to their certifications and ratifications, quality control in all the stages of the production, manufacturing of the faucet factory in his factory, in Obernai, according to a robust know-how.

This constant research for the absolute quality allows HORUS to offer to his customers manufactured-in-France goods through a rich range of collections going of the retro or neo-classic style until the most contemporary and minimalistes forms et answering in the requirements of the various international standards.

Quality, fonctionality, and design illustrate perfectly the universe of the luxury faucet factory, imagined by HORUS.

A.C.S. FRANCE · ETA DANMARK · JWWA JAPON · PUB SINGAPOUR

CSA C US · NSF C US · CAL GREEN AB1953 COMPLIANT · EPV Entreprise du Patrimoine Vivant L'excellence des savoir-faire français

* Please ask for products certified

WARRANTY / GARANTIE

All products are guaranteed against any operating defect for a period of five (5) years. The warranty shall not apply to conspicuous defects. The following are also excluded from the warranty:

- **Wear to the joints, ceramic heads or surface treatments (with the exception of chrome)**
- **Damage to parts resulting from incorrect assembly that was not carried out by a qualified professional in accordance with good professional practices**
- **Damage to parts resulting from the seller's assembly instructions**
- **Damage to parts resulting from the standards and DTU (single technical documents) in force**
- **Defects and damage resulting from abnormal use**
- **Defects and damage resulting from the presence of abrasive hard water or water with non-standard electrolytic or chemical properties**
- **Defects and damage resulting from transport or installation**
- **Defects and damage resulting from incorrect cleaning**

HORUS

2022 PRICE LIST

CANADA

Designer Brands for Kitchen & Bath
streamline
CANADA

ORDERS@STREAMLINECANADA.CA

U.S.A.

Aloré Design

ORDERDESK@ALOREDESIGN.COM

1-866-503-9796