102 83 708

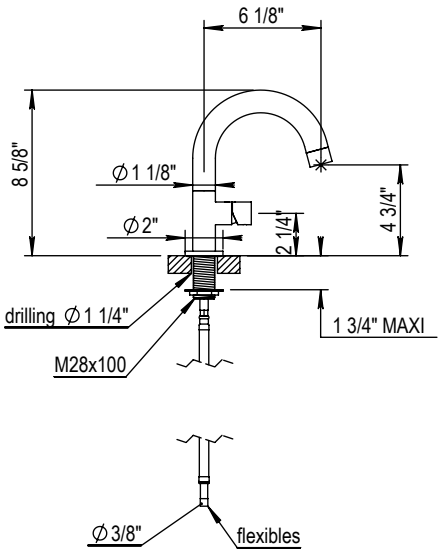
6 1/8"
8 5/8"
∅ 1 1/8"
∅ 2"
2 1/4"
4 3/4"
drilling ∅ 1 1/4"
M28x100
1 3/4" MAXI
∅ 3/8"
flexibles