HORUS
VINTAGE & DESIGN
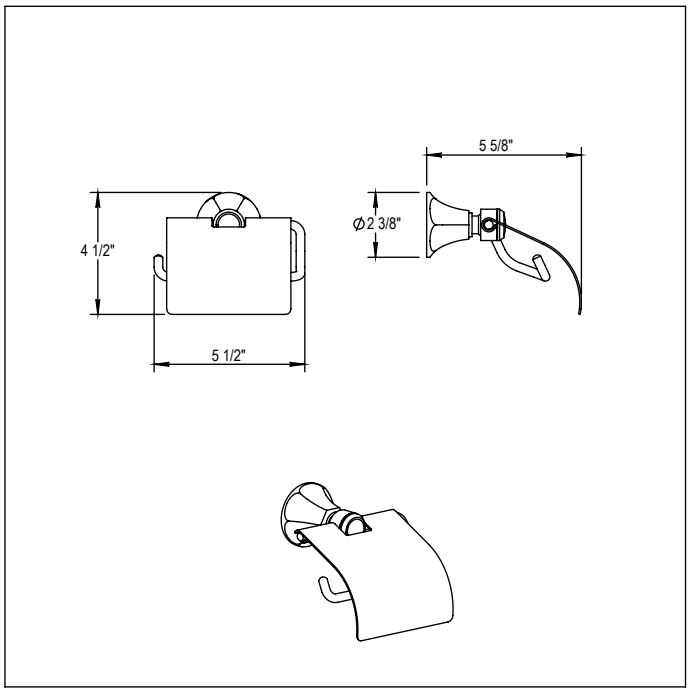
102 32 618