HORUS

2024 PRICE LIST

aloredesign.com
streamlinecanada.ca

TABLE OF CONTENTS

CLASSIC COLLECTIONS

ZEPHYR 4

MONTMARTRE 10

ST-GERMAIN 21

ASCOTT 32

ANTHEA 40

DOVER 46

ELOISE 53

MONROE 59

CONTEMPORARY COLLECTIONS

MYRIAD 64

NEW WAVE 73

ROUGH-INS 80

SHOWER 82

ACCESSORIES 85

CERAMICS New! 90

KITCHEN 92

WARRANTY 97

REPLACEMENT PARTS 98

NOTE!
This check mark symbol indicates IN STOCK items, and which finishes are in stock.
In stock items ship in 24 hours

HORUS Standard Finishes:

ALL NON-LIVING FINISHES ARE LACQUERED AND PROTECTED

PC
Polished Chrome

PN
Polished Nickel

BN
Brushed Nickel

NC
Matte Black & Chrome

HORUS Specialty Finishes: Special Order & Non-Refundable

GROUP 1

UB
Unlacquered Brass
*** Living Finish ***

AB
Antique Brass
Matte Varnish

GAB
Glossy Antique Brass
Glossy Varnish
*** New ***

MC
Matte Copper
Matte Varnish
*** New ***

GC
Glossy Copper
Gloss Varnish
*** New ***

GROUP 2

GB
Golden Brass
Gloss Varnish

CB
Cannon Bronze
Matte Varnish

PG
Polished Gold

MG
Matte Gold

HORUS Caps

White Porcelain Indices are standard

Standard Chaud Froid

Option: Metal Indices all finishes

Blank Hot Cold

All metal indice caps are special order items, see page 95

For all product in all-metal indices, pop-up rods and handshower, add **MH** before the finish code, i.e. 102.62.434**MH**PN

10% Upcharge applies to all products, except:
Exposed Showers at 3%,
Tub Fillers .434/.435/.498 at 5%

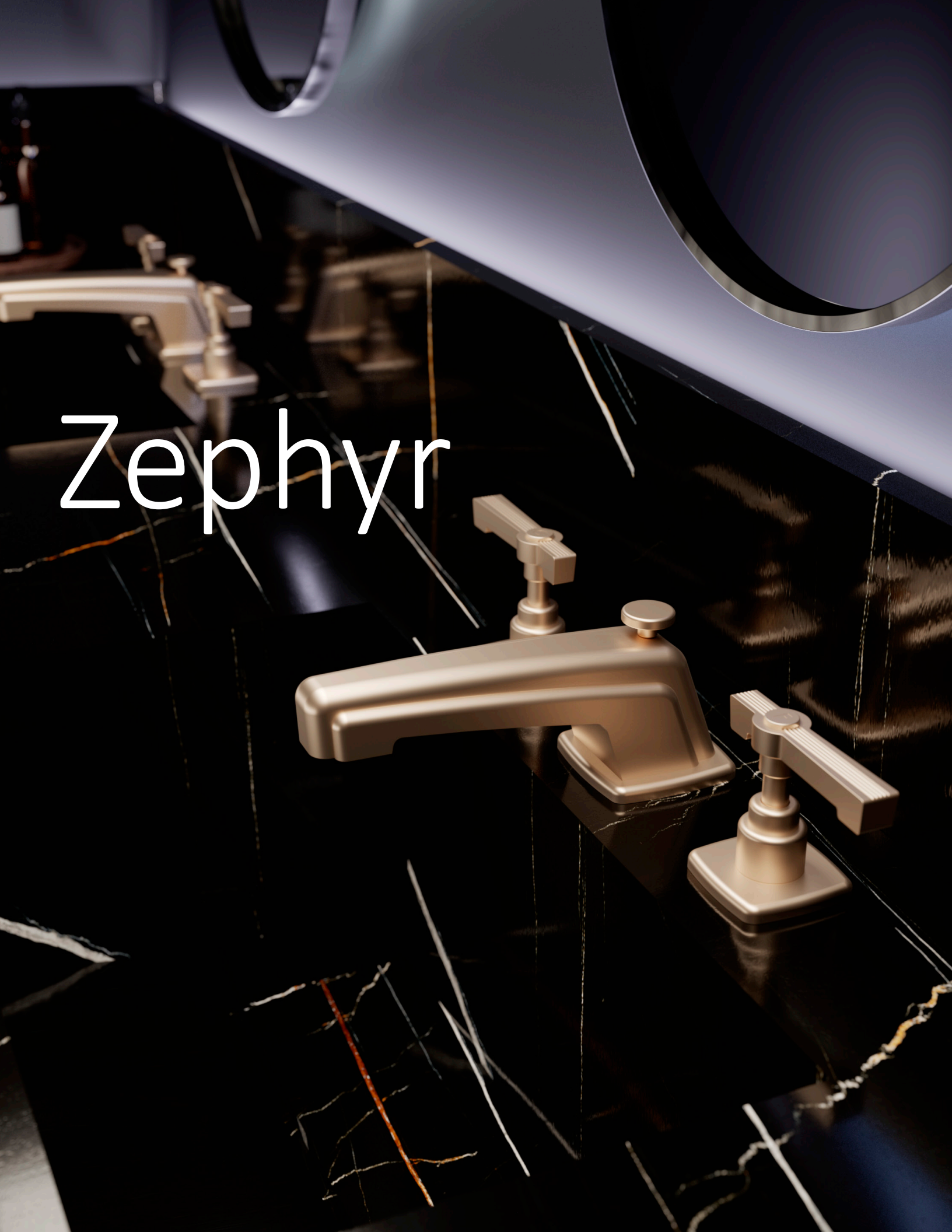
Zephyr

Single Hole Basin Mixer

100.16.709

Single lever basin mixer with up and down drain - flexible hoses

PC	$1335 ✓
PN	$1395 ✓
BN	$1535
MB	$1990
SG	$1990
GM	$1990

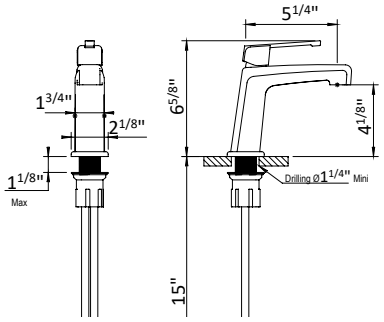

Single Hole Vessel Mixer

100.16.719

Single lever vessel mixer with up and down drain - flexible hoses

PC	$1660
PN	$1745
BN	$1895
MB	$2490
SG	$2490
GM	$2490

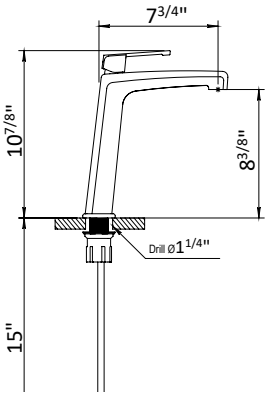

3-Hole Basin Mixer

100.16.260

100.17.260

3 Hole basin mixer with pop-up waste - flexible hoses

PC	$1990 ✓
PN	$2090 ✓
BN	$2290
MB	$2985
SG	$2985
GM	$2985

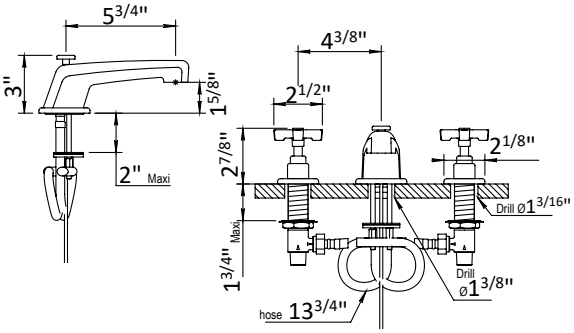

3-Hole Wall Mixer

100.16.263

100.17.263

Concealed wall mounted 3 hole basin mixer with pop-up waste

PC	$1990
PN	$2090
BN	$2290
MB	$2985
SG	$2985
GM	$2985

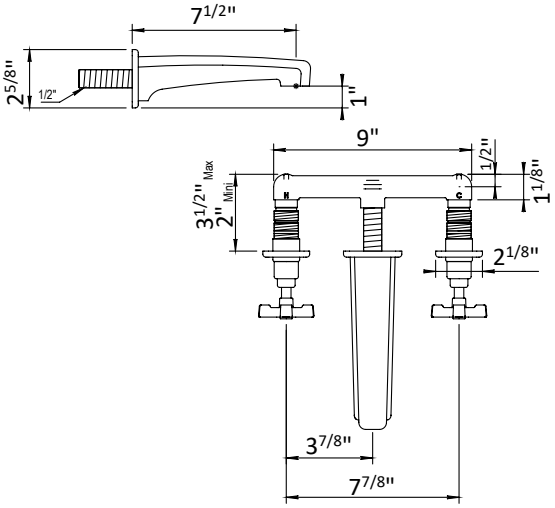

✓ **NOTE!** This check mark symbol indicates IN STOCK

Single Hole Basin Mixer

100.16.763

Concealed wall mounted basin mixer without pop-up waste

PC	$1680
PN	$1770
BN	$1935
MB	$2495
SG	$2495
GM	$2495

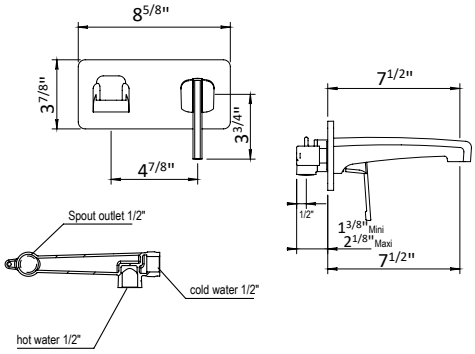

Single Hole Vessel Mixer

100.16.414

100.17.414

Complete wall bath/ shower mixer
Centres 5⅞"+/- ⅜"

PC	$3315
PN	$3480
BN	$3810
MB	$4970
SG	$4970
GM	$4970

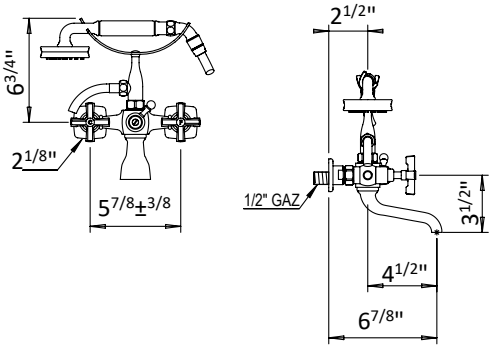

Wall Tub Spout

100.16.471

PC	$730
PN	$765
BN	$840
MB	$1095
SG	$1095
GM	$1095

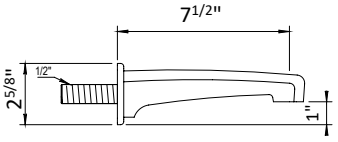

Complete Shower Set

100.16.797

Complete exposed thermostatic wall shower set + centres 5⅞"+/- ⅜" + 8" showerhead + 59" hose + handshower on sliding bar

PC	$4995
PN	$5280
BN	$5785
MB	$7540
SG	$7540
GM	$7540

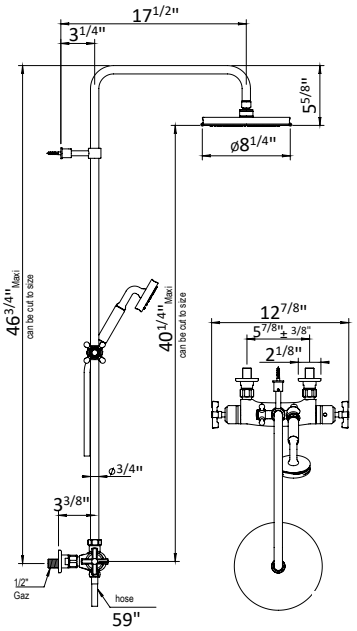

STANDARD FINISHES PC Chrome · PN Polished Nickel · BN Brushed Nickel

DECORATION FINISHES MB Matte Black · SG Satin Gold · GM Gun Metal

Thermostatic Mixer

100.16.507	**PC**	$1275
	PN	$1340
100.17.507	**BN**	$1465
	MB	$1895
	SG	$1895
	GM	$1895

Trim only for thermostatic mixing valve. Requires Rough in 100.93.591

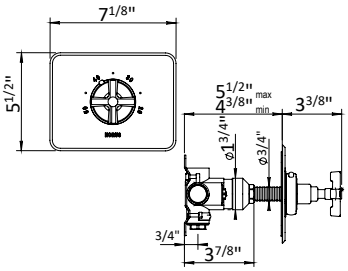

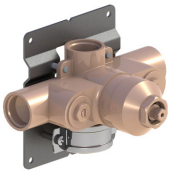

100.93.591	**BT**	$595 ✓

Concealed thermostatic mixing valve with wall bracket, 1 outlet + 1 free outlet

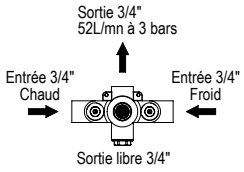

Shower Mixer

100.16.508	**PC**	$1680
	PN	$1765
100.17.508	**BN**	$1930
	MB	$2520
	SG	$2520
	GM	$2520

Trim only for thermostatic mixing valve (100.93.593)

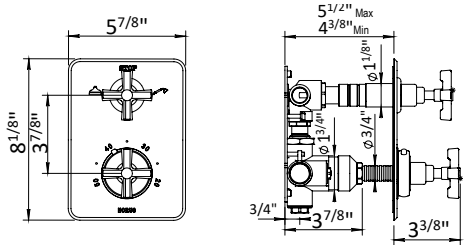

Requires mixing valve 100.93.593BT

100.93.593	**BT**	$1395✓

Concealed thermostatic mixing valve with 1 control / diverter, 2 outlets + 1 free outlet with wall bracket

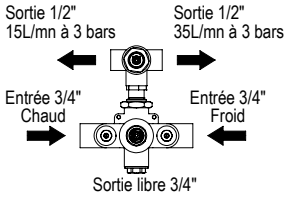

Thermostatic Trim

100.16.578	**PC**	$410
	PN	$430
100.17.578	**BN**	$475
	MB	$615
	SG	$615
	GM	$615

Trim for wall valve. Rough in required from list below

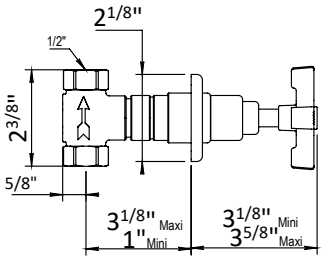

Requires one of the following mixing valves:
See page 79 for details

100.92.046	**BT**	$180 ✓	(1/2'' VC closing clockwise)
100.92.048	**BT**	$205	(1/2'' VC closing counter-clockwise)
100.92.047	**BT**	$180 ✓	(3/4'' VC closing clockwise)
100.92.049	**BT**	$205	(3/4'' VC closing counter-clockwise)
100.92.030	**BT**	$540	(1/2'' 2 function diverter)
100.92.090	**BT**	$595	(1/2'' 3 function diverter)

✓ **NOTE!** This check mark symbol indicates IN STOCK

Wall Shower Set

ANTI-SCALE NOZZLES

100.16.532

Wall shower set with rail, flexible hose, outlet and handspray

PC	$1690
PN	$1770
BN	$1935
MB	$2530
SG	$2530
GM	$2530

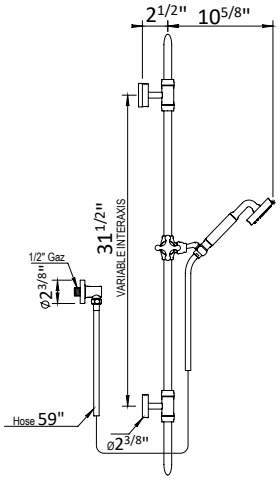

Wall Shower Set

ANTI-SCALE NOZZLES

100.16.589

Wall shower set with rail, flexible hose, outlet and handspray

PC	$945
PN	$995
BN	$1085
MB	$1420
SG	$1420
GM	$1420

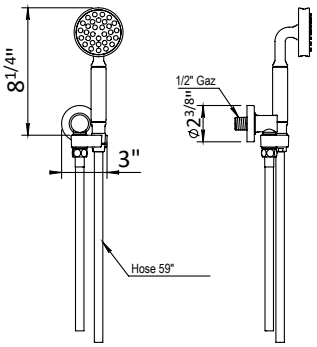

Showerhead & Arm

ANTI-SCALE NOZZLES

100.16.535

Anti-scale nozzles 8¼" shower head with wall mounted arm

PC	$1920
PN	$2015
BN	$2200
MB	$2880
SG	$2880
GM	$2880

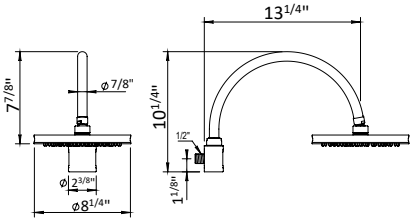

Showerhead & Arm

ANTI-SCALE NOZZLES

100.16.536

Anti-scales nozzles 5¾" shower head with wall mounted arm

PC	$865
PN	$915
BN	$995
MB	$1295
SG	$1295
GM	$1295

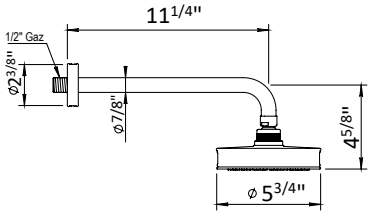

STANDARD FINISHES PC Chrome · PN Polished Nickel · BN Brushed Nickel

DECORATION FINISHES MB Matte Black · SG Satin Gold · GM Gun Metal

16 | 17 Zephyr

Showerhead & Arm

ANTI-SCALE NOZZLES

100.16.537

Anti-scale nozzles 8¼" shower head with wall mounted arm

PC	$1345
PN	$1410
BN	$1550
MB	$2020
SG	$2020
GM	$2020

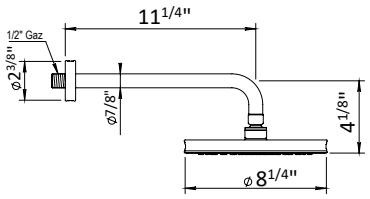

16 | 17 Zephyr Shower Kits

Anti-scale nozzles 8¼" shower head with wall mounted arm, wall shower set, and 2 function thermostatic trim & rough

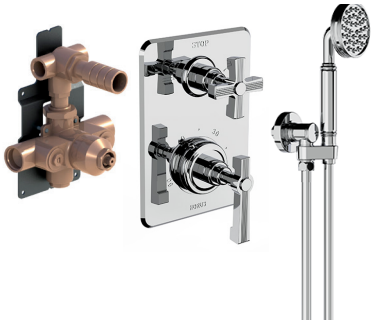

100.16.001

100.17.001

PC	$5940
PN	$6170
BN	$6610
MB	$8215
SG	$8215
GM	$8215

Components Included

100.16.535	Showerhead & Arm
100.16.589	Wallshower set
100.16/17.508	2 Function Thermostatic Trim
100.93.593BT	Thermostatic Rough

Rough and Trim Kits can be sold Seperately.

Rough-In:
100.92.593BT $1395

Trim Kit:
102.16.001-TR or
102.17.001-TR
Deduct $1395 from Full kit

Anti-scale nozzles 8¼" shower head with wall mounted arm, wall shower set, and 2 function thermostatic trim & rough

100.16.902

100.17.902

100.16.002

100.17.002

PC	$5915
PN	$6165
BN	$6655
MB	$8380
SG	$8380
GM	$8380

Components Included

100.16.535	Showerhead & Arm
100.16.589	Wallshower set
100.16/17.507	Thermostatic Trim
100.93.591BT	Thermostatic Rough
2x 100.16/17.578	Volume Control Trim
2x 100.92.046BT	Volume Control Rough

Rough and Trim Kits can be sold Seperately.

Rough Kit:
102.01.000 $955

Trim Kit:
102.16.002-TR or
102.17.002-TR
Deduct $955 from Full kit

Montmartre

3-Hole Basin Mixer

102.07.260

102.50.260

- Swivel Spout
- ¼-Turn Ceramic Disc
- Flow Rate: 2.2 GPM
- CalGreen Low Flow Aerator and Low Lead Available

PC	$1870 ✓
PN	$1970 ✓
BN	$2045
Group 1	$2890
Group 2	$3495

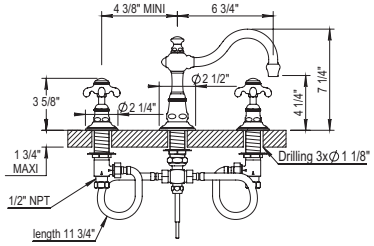

3-Hole Gooseneck Basin Mixer

102.07.261

102.50.261

- Swivel Spout
- ¼-Turn Ceramic Disc
- Flow Rate: 2.2 GPM
- CalGreen Low Flow Aerator and Low Lead Available

PC	$1370
PN	$1385
BN	$1420
Group 1	$1885
Group 2	$2415

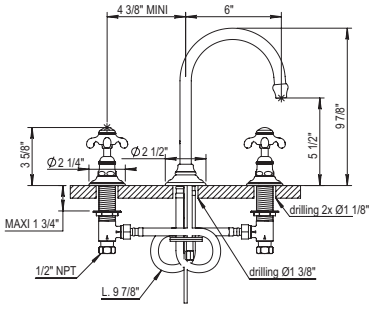

3-Hole Wall Mounted Basin Mixer

Trim Only available: i.e. 102.07.262PN-**TO**
Deduct $360 from complete list for Trim only Pricing.
Roughs Available:
Ref 100.92.046BT & 100.92.048BT P.81

102.07.262

102.50.262

- Swivel Spout
- ¼-Turn Ceramic Disc
- Lift & Turn Drain HOP93.011
- Flow Rate: 2.2 GPM
- CalGreen Low Flow Aerator and Low Lead Available

PC	$1775
PN	$1855
BN	$1995
Group 1	$2575
Group 2	$3295

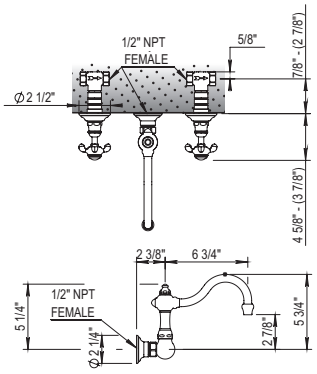

2-Hole Bridge Basin Mixer

102.07.207

102.50.207

- Swivel Spout
- ¼-Turn Ceramic Disc
- Lift & Turn Drain
- Flow Rate: 2.2 GPM
- CalGreen Low Flow Aerator and Low Lead Available

PC	$1795
PN	$1895
BN	$1995
Group 1	$2630
Group 2	$3370

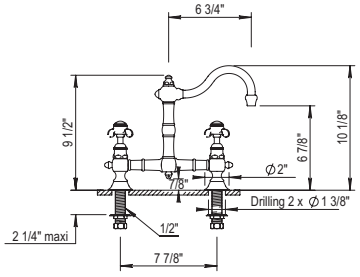

✓ **NOTE!** This check mark symbol indicates IN STOCK

Group 1: UB / AB / GAB / MC / GC **Group 2:** GB / CB / PG / MG

Emily Single Lever Basin Mixer

100.01.708

- Swivel Spout
- Ceramic Disc Cartridge
- Flow Rate: 2.2 GPM
- All Metal Lever Handle Available
- CalGreen Low Flow Aerator and Low Lead Available

PC	$1185
PN	$1245
BN	$1485
Group 1	$1895
Group 2	$2430

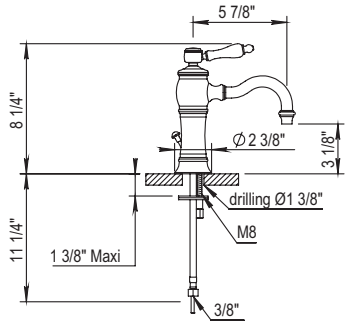

Emily Single Lever Basin Mixer

100.02.708

- Swivel Spout
- Ceramic Disc Cartridge
- Flow Rate: 2.2 GPM
- All Metal Lever Handle Available
- CalGreen Low Flow Aerator and Low Lead Available

PC	$1185
PN	$1245
BN	$1485
Group 1	$1895
Group 2	$2430

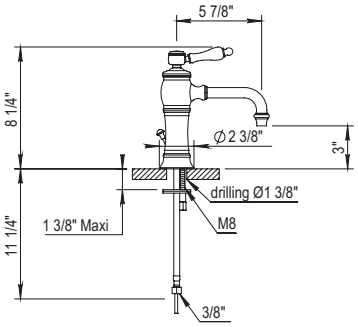

Emily Single Lever Vessel Mixer

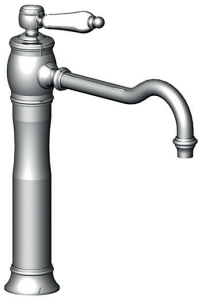

100.01.703

- Swivel Spout
- Ceramic Disc Cartridge
- Flow Rate: 2.2 GPM
- All Metal Lever Handle Available
- **Drain is Not Included**
- Lift And Turn Drain Available On Request HOP92.023 (p.101)
- CalGreen Low Flow Aerator and Low Lead Available

PC	$1320
PN	$1385
BN	$1535
Group 1	$1975
Group 2	$2530

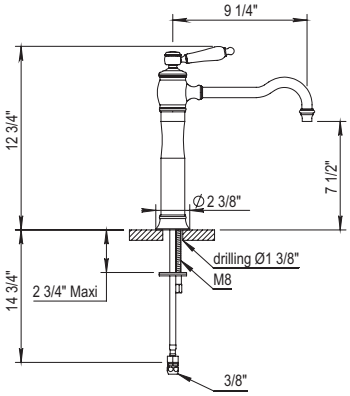

Emily Single Lever Vessel Mixer

100.02.703

- Swivel Spout
- Ceramic Disc Cartridge
- Flow Rate: 2.2 GPM
- All Metal Lever Handle Available
- **Drain is Not Included**
- Lift And Turn Drain Available On Request HOP92.023 (p.101)
- CalGreen Low Flow Aerator and Low Lead Available

PC	$1320
PN	$1385
BN	$1535
Group 1	$1975
Group 2	$2530

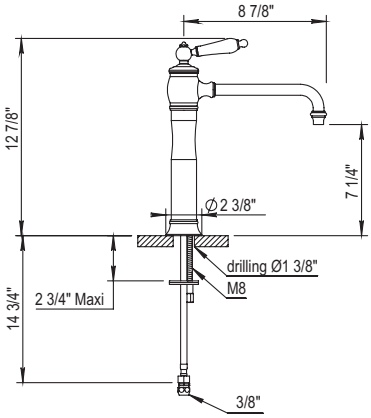

Accessories on page 85

Single Hole 2 Handle Basin Mixer

102.07.208

- Swivel Spout
- ¼-Turn Ceramic Disc
- Flow Rate: 2.2 GPM
- CalGreen Low Flow Aerator and Low Lead Available

PC	$1555
PN	$1620
BN	$1645
Group 1	$2255
Group 2	$2890

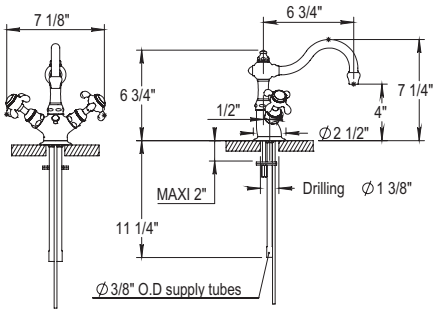

Basin Pillar Tap

102.07.231

102.50.231

- Fixed Spout
- ¼-Turn Ceramic Disc
- No Aerator

PC	$495
PN	$540
BN	$590
Group 1	$735
Group 2	$940

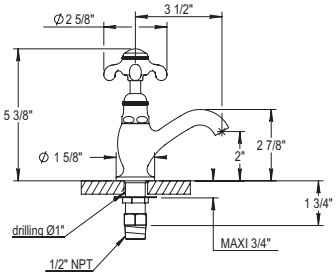

Single Hole Two-Handle Bidet Mixer

102.07.311

- Swivel Spout
- ¼-Turn Ceramic Disc
- 40º Rotating Aerator

PC	$1435
PN	$1495
BN	$1595
Group 1	$2080
Group 2	$2665

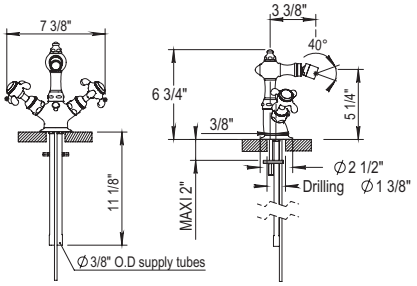

Exposed Wall Mounted Tub Filler with Handshower

102.07.434

102.50.434

- Fixed Spout
- ¼-Turn Ceramic Disc
- 59” Shower Hose
- Flow Rate: 11 GPM
- Vacuum Breaker Built Inside the Body
- All Metal Handle Available
- Anti-calcium Handshower

07.434: Middle handle Lever
50.434: Middle handle Cross

ANTI-SCALE NOZZLES

PC	$3940
PN	$4235
BN	$4500
Group 1	$5715
Group 2	$7320

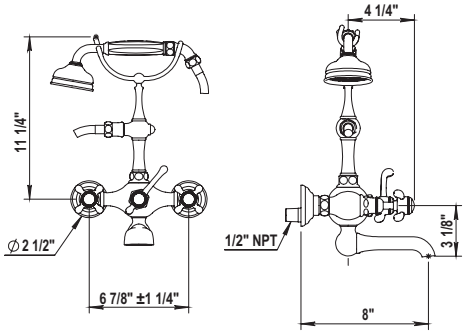

Exposed Deck Mounted Tub Filler with Handshower

102.07.435

102.50.435

- Fixed Spout
- ¼-Turn Ceramic Disc
- 59” Shower Hose
- Excentrical Centers ±1”
- Flow Rate: 11 GPM
- Vacuum Breaker Built Inside the Body
- All Metal Handle Available
- Anti-calcium Handshower

07.435: Middle handle Lever
50.435: Middle handle Cross

ANTI-SCALE NOZZLES

PC	$4530
PN	$4790
BN	$5090
Group 1	$6685
Group 2	$8570

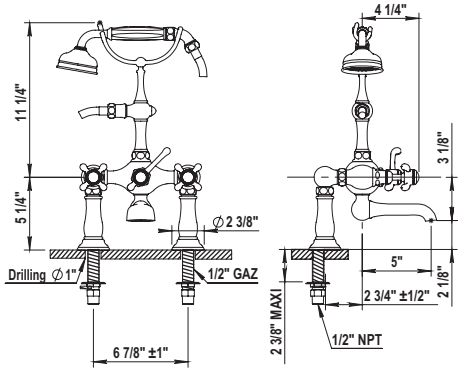

Exposed Floor Mounted Tub Filler with Handshower

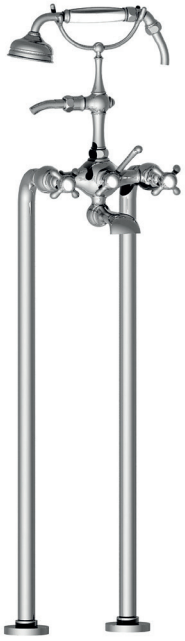

102.07.498

102.50.498

- Fixed Spout
- ¼-Turn Ceramic Disc
- 59” Shower Hose
- ¾” NPT Connections
- Flow Rate: 11 GPM
- Vacuum Breaker Built Inside The Body
- All Metal Handle Available
- Anti-calcium handhower

ANTI-SCALE NOZZLES

PC	$5295
PN	$5355
BN	$5930
Group 1	$7690
Group 2	$9850

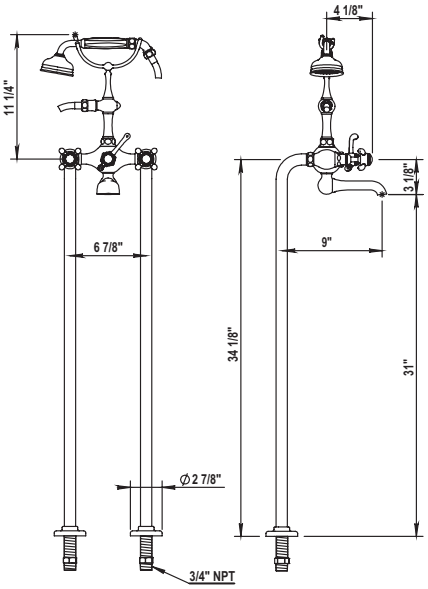

T-Connector for Floor Risers

100.00.499

- Drain Diameter: 1” min to 1 ½” max

Floor installed version on page 61

PC	$875
PN	$935
BN	$1035
Group 1	$1265
Group 2	$1620

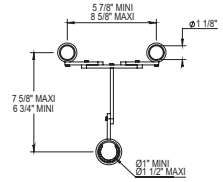

Accessories on page 85

4 Hole Deck Tub Shower Set with Handshower

102.07.464

102.50.464

PC	$2835
PN	$2930
BN	$3105
Group 1	$4110
Group 2	$5270

- ¾" ¼-Turn Ceramic Disc
- Fixed Spout with Integrated Diverter
- Retractable handshower with 79" Hose
- Flow Rate: 14 GPM
- All Metal Handle Available
- Anti-calcium handshower

ANTI-SCALE NOZZLES

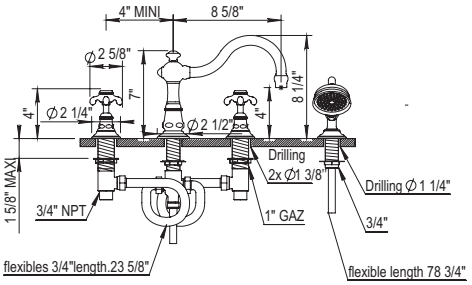

3 Hole Deck Tub Shower Set

102.07.463

102.50.463

PC	$1975
PN	$2025
BN	$2130
Group 1	$2860
Group 2	$3660

- Fixed Spout.
- Includes T Connection
- Includes Hoses
- Flow Rate: 14 GPM
- ¼-Turn Ceramic Disc

ANTI-SCALE NOZZLES

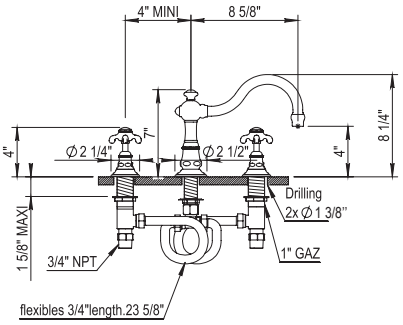

8'' Tub Spout

102.07.471

PC	$505
PN	$535
BN	$585
Group 1	$735
Group 2	$940

- Solid Brass
- ¾" Female NPT

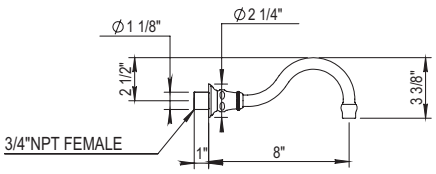

Exposed Thermostatic Valve with Tub Spout

ANTI-SCALE NOZZLES

102.07.754-10

PC	$8985
PN	$9370
BN	$9895
Group 1	$13035
Group 2	$16695

- Two ¼-Turn Ceramic Disc Volume Control
- 10.6” Showerhead
- 60” Handshower Hose
- Integrated Diverter for Handshower
- Includes Anti-calcium Handshower, Hose and Wall Hook
- Flow Rate: 9 GPM
- All Metal Handle Available
- **Integrated Service Stops**
- Showerhead Restrictor Available Upon Request
- Option to change to 8’’ showerhead by ordering **102.07.754**
- Showerhead with 50° rotating ball joint

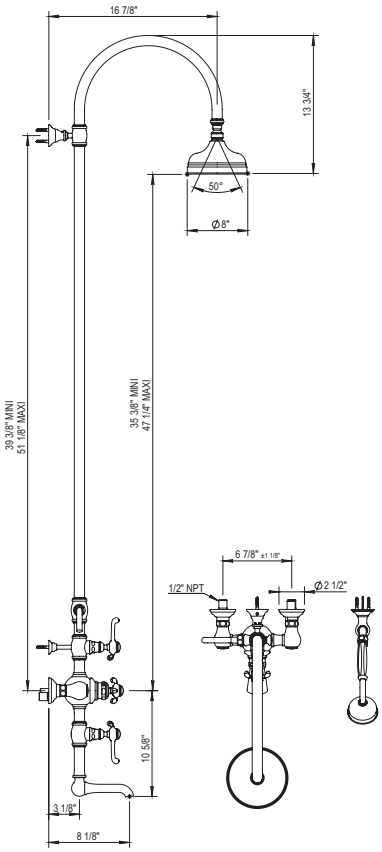

Exposed Thermostatic Valve with Handshower

ANTI-SCALE NOZZLES

102.07.744-10

PC	$8030
PN	$8405
BN	$9070
Group 1	$12190
Group 2	$15620

- Two ¼-Turn Ceramic Disc Volume Control
- 10.6” Showerhead
- 60” Handshower Hose
- Includes Anti-calcium Handshower, Hose and Wall Hook
- Flow Rate: 9 GPM
- All Metal Handle Available
- Integrated Service Stops
- Can Come Plugged Under Second Volume Control With Hand Shower And Hose Separate Upon Request.
- Showerhead Restrictor Available Upon Request
- Option to change to 8’’ showerhead by ordering **102.07.744**

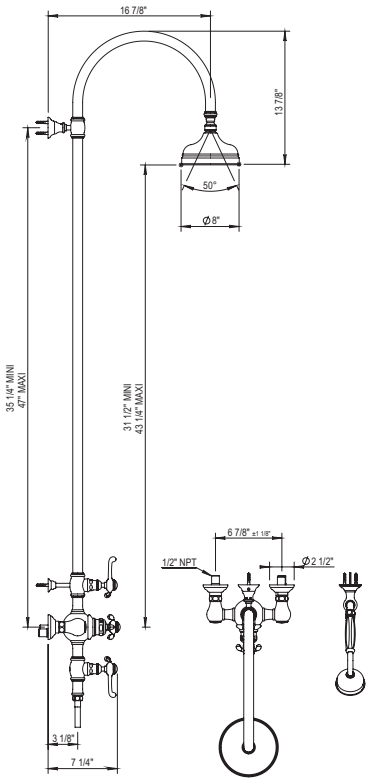

Accessories on page 85

3/4'' Thermostatic Mixer- Trim Only

102.07.521 **PC** $1130
PN $1175
102.50.521 **BN** $1235
Group 1 $1645
Group 2 $2110

Solid Brass Trim Plate.

Requires mixing valve
100.92.591BT or
102.92.524BT
See page 80 for details

100.92.591 **BT** $595 ✓
or 102.92.524 **BT** $2395

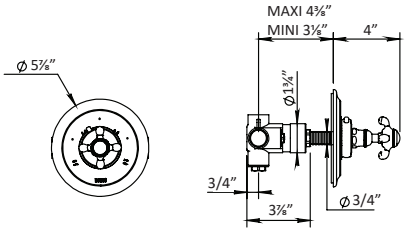

3/4'' Thermostatic Mixer- Trim Only

102.07.507 **PC** $1095
PN $1130
102.50.507 **BN** $1200
Group 1 $1965
Group 2 $2515

Solid Brass Trim Plate.

Requires mixing valve
100.92.591BT.
See page 80 for details

100.92.591 **BT** $595 ✓

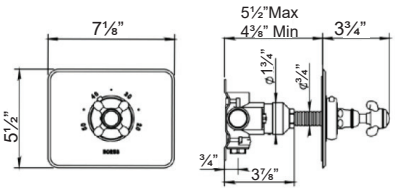

3/4'' Thermostatic Mixer- Trim Only

102.07.502 **PC** $1620
PN $1770
102.50.502 **BN** $2010
Group 1 $2355
Group 2 $3020

Solid Brass Trim Plate.
Single function 2-way diverter. Safety stop at 37°C (99°F)

Requires mixing valve 100.92.593BT
See page 80 for details

100.92.593 **BT** $1395 ✓

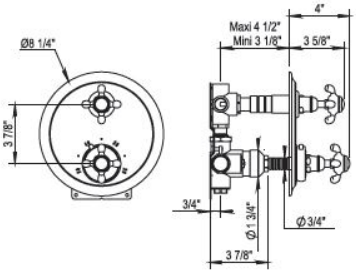

3/4'' Thermostatic Mixer- Trim Only

102.07.508 **PC** $1560
PN $1695
102.50.508 **BN** $1960
Group 1 $2365
Group 2 $3030

Solid Brass Trim Plate.
Single function 2-way diverter. Safety stop at 37°C (99°F)

Requires mixing valve 100.92.593BT
See page 80 for details

100.92.593 **BT** $1395 ✓

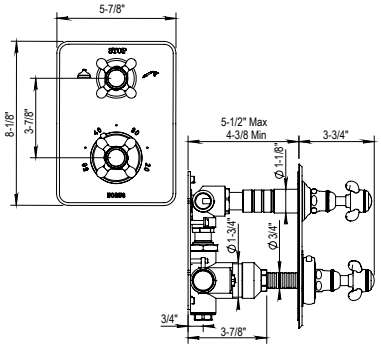

3/4'' Thermostatic Mixer with Diverter- Trim Only

102.07.529 **PC** $1640
PN $1785
102.50.529 **BN** $2085
Group 1 $2380
Group 2 $3050

Solid Brass Trim Plate.
Single function 3-way diverter. Safety stop at 37°C (99°F)

Requires mixing valve 100.92.599BT
See page 80 for details

100.92.599 **BT** $1450✓

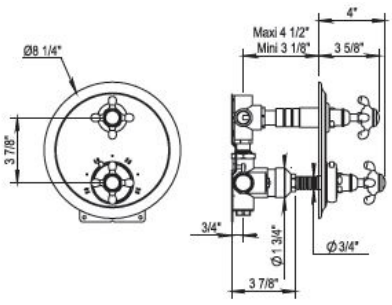

3/4'' Thermostatic Mixer- Trim Only

102.07.527 **PC** $1860
PN $1960
BN $2035
Group 1 $2645
Group 2 $3385

Solid Brass Trim Plate.
Reversible Plate
Safety stop at 37°C (99°F)

Requires mixing valve 100.92.597BT
See page 80 for details

100.92.597 **BT** $1595

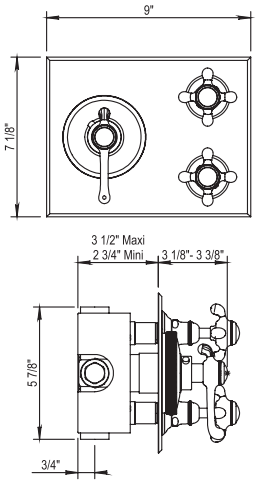

Volume Control- Trim Only

102.07.578 **PC** $365
PN $390
102.50.578 **BN** $420
Group 1 $535
Group 2 $685

- Trim for ½" or ¾" Volume Control Roughs
- Trim for in Wall Diverters

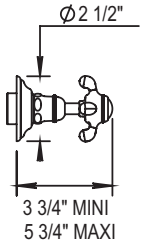

Requires one of the following mixing valves:
See page 81 for details

100.92.046	**BT**	$180 ✓	(1/2'' VC closing clockwise)
100.92.048	**BT**	$205	(1/2'' VC closing counter-clockwise)
100.92.047	**BT**	$180 ✓	(3/4'' VC closing clockwise)
100.92.049	**BT**	$205	(3/4'' VC closing counter-clockwise)
100.92.030	**BT**	$540	(1/2'' 2 function diverter)
100.92.090	**BT**	$595	(1/2'' 3 function diverter)

Accessories on page 85

Vintage Handshower & Fixed Handshower Holder

ANTI-SCALE NOZZLES

100.01.589

- Wall Union
- 59'' Metal Hose
- Fixed Handshower Holder
- Flow Rate: 2.2 GPM
- All Metal Handle Available
- Anti-calcium Handshower

PC	$865
PN	$895
BN	$990
Group 1	$1290
Group 2	$1655

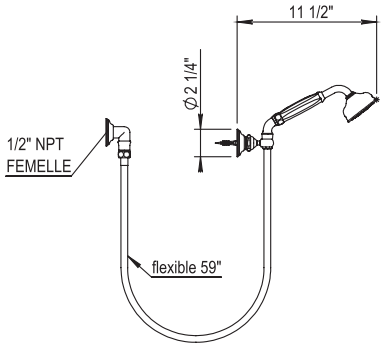

Vintage Handshower & Sliding Bar

ANTI-SCALE NOZZLES

100.01.532

- Wall Union
- 59'' Metal Hose
- Swiveling Handshower Holder
- 23 5/8'' Sliding Wall Bar
- All Metal Handle Available
- Anti-calcium Handshower

PC	$1350
PN	$1395
BN	$1520
Group 1	$2025
Group 2	$2595

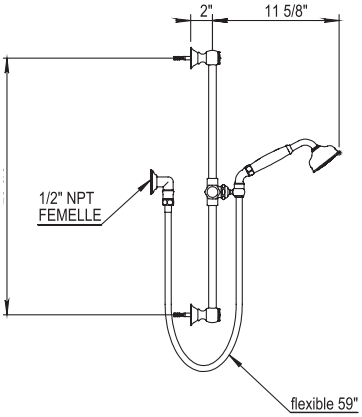

Massage Body Spray

ANTI-SCALE NOZZLES

100.00.573

- 1/2'' NPT Adaptor Connection
- Anti-Calcium Massage Body Spray

PC	$245
PN	$280
BN	$345
Group 1	$375
Group 2	$435

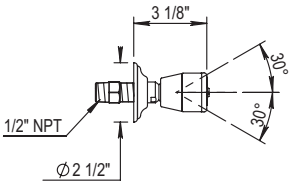

07 | 50 Montmartre Shower Kits

10” shower head with ceiling mounted arm, wall shower set, and 2 function thermostatic trim & rough

102.07.001

PC	$6065
PN	$6405
BN	$6895
Group 1	$8145
Group 2	$9965

Components Included

B006976	Showerhead
100.92.540	Ceiling Arm
100.01.532	Wallshower set
100.07.527	Thermostatic Trim
100.92.597BT	Thermostatic Rough

Rough and Trim Kits can be sold Seperately.

Rough-In:
100.92.597BT $1595

Trim Kit:
102.07.001-TR or
102.50.001-TR
Deduct $1595 from Full kit

6” shower head with angled wall mounted arm, wall shower set, thermostatic trim & rough and 2 shut offs.

102.07.002
102.50.002

PC	$5425
PN	$5745
BN	$6290
Group 1	$7645
Group 2	$9380

Components Included

100.92.945	6” Showerhead
100.92.960	Angled Wall arm
100.01.532	Wallshower set
102.07/50.521	Thermostatic Trim
100.92.591BT	Thermostatic Rough
2x 100.07/50.578	Volume Control Trim
2x 100.92.046BT	Volume Control Rough

Rough and Trim Kits can be sold Seperately.

Rough Kit:
102.00.002 $955

Trim Kit:
102.07.002-TR or
102.50.002-TR
Deduct $955 from Full kit

4⅛” shower head with angled wall mounted arm, wall shower set, thermostatic trim & rough and 2 shut offs.

102.07.003
102.50.003

PC	$4725
PN	$5000
BN	$5460
Group 1	$6535
Group 2	$8035

Components Included

100.92.435	4⅛” Showerhead
100.92.960	Angled Wall arm
100.01.589	Wallshower set
102.07/50.521	Thermostatic Trim
100.92.591BT	Thermostatic Rough
2x 100.07/50.578	Volume Control Trim
2x 100.92.046BT	Volume Control Rough

Rough and Trim Kits can be sold Seperately.

Rough Kit:
102.00.002 $955

Trim Kit:
102.07.003-TR or
102.50.003-TR
Deduct $955 from Full kit

Saint Germain

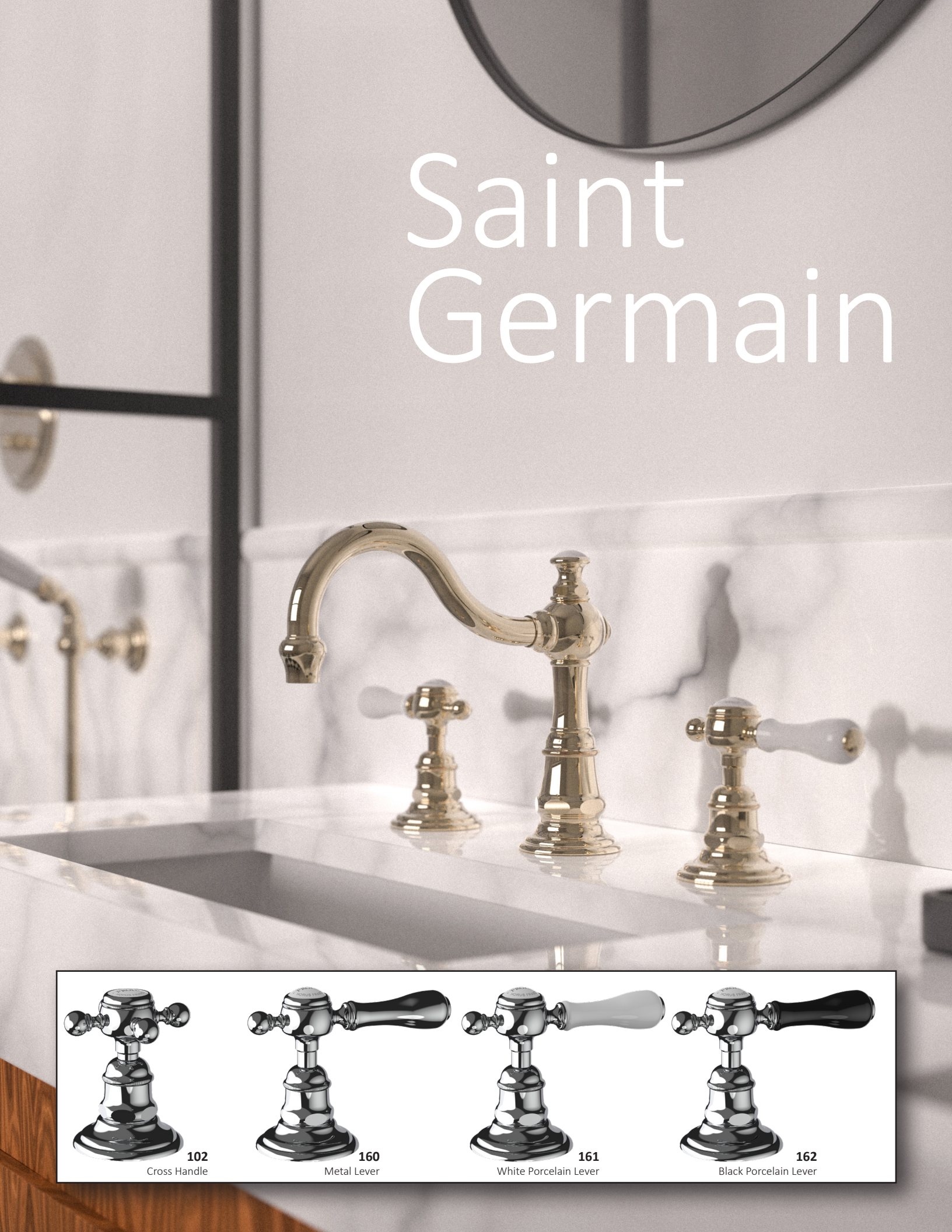

102
Cross Handle

160
Metal Lever

161
White Porcelain Lever

162
Black Porcelain Lever

66 | 67 Saint Germain

Metal Cross **102.66.**

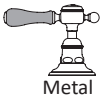
Metal Lever **160.67.**

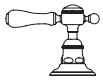
White Porcelain Lever **161.67.**

Black Porcelain Lever **162.67.**

3 Hole Basin Mixer

102.66.260	**PC**	$1850
160.67.260	**PN**	$1885
161.67.260	**BN**	$2045
162.67.260	**Group 1**	$2740
	Group 2	$3495

- Swivel Spout
- ¼-Turn Ceramic Disc
- Flow Rate: 2.2 GPM
- CalGreen Low Flow Aerator and Low Lead Available
- Pop up waste included

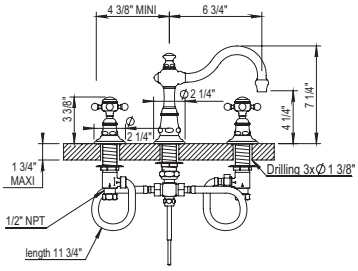

3 Hole Gooseneck Basin Mixer

102.66.261	**PC**	$1370
160.67.261	**PN**	$1385
161.67.261	**BN**	$1420
162.67.261	**Group 1**	$1885
	Group 2	$2415

- Swivel Spout
- ¼-Turn Ceramic Disc
- Flow Rate: 2.2 GPM
- CalGreen Low Flow Aerator and Low Lead Available
- Pop up waste included

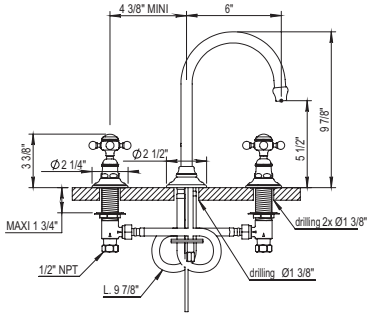

3 Hole Wall Mounted Basin Mixer

102.66.262	**PC**	$1775
160.67.262	**PN**	$1855
161.67.262	**BN**	$1995
162.67.262	**Group 1**	$2575
	Group 2	$3295

- Swivel Spout
- ¼-Turn Ceramic Disc
- Lift & Turn Drain included
- Flow Rate: 2.2 GPM
- CalGreen Low Flow Aerator and Low Lead Available

Trim Only available: i.e. 102.66.262PN-**TO**
Deduct $360 from list price for Trim only Pricing.
Roughs available: 100.92.046BT & 100.92.048BT (Page 81)

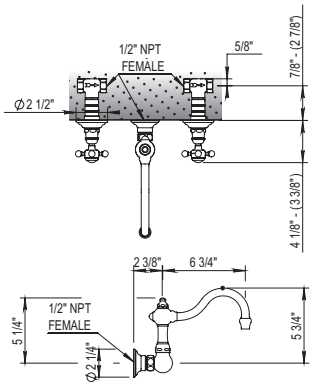

2 Hole Bridge Basin Mixer

102.66.207	**PC**	$1815
160.67.207	**PN**	$1900
161.67.207	**BN**	$1995
162.67.207	**Group 1**	$2630
	Group 2	$3370

- Swivel Spout
- ¼-Turn Ceramic Disc
- Lift & Turn Drain Included
- Flow Rate: 2.2 GPM
- CalGreen Low Flow Aerator and Low Lead Available

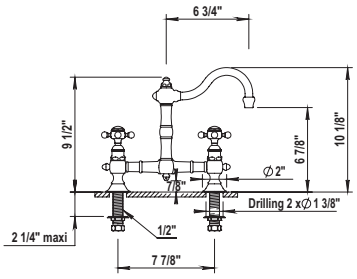

Accessories on page 85

66 | 67 Saint Germain

Emily Single Lever Basin Mixer

100.01.708

PC	$1185
PN	$1245
BN	$1485
Group 1	$1895
Group 2	$2430

- Swivel Spout
- Ceramic Disc Cartridge
- Flow Rate: 2.2 GPM
- All Metal Handle Available
- CalGreen Low Flow Aerator and Low Lead Available
- Pop up waste included

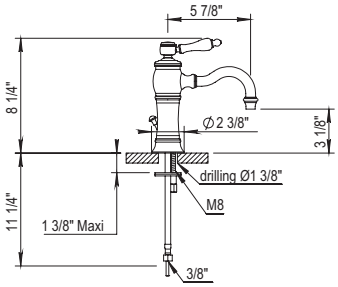

Emily Single Lever Basin Mixer

100.02.708

PC	$1185
PN	$1245
BN	$1485
Group 1	$1895
Group 2	$2430

- Swivel Spout
- Ceramic Disc Cartridge
- Flow Rate: 2.2 GPM
- All Metal Handle Available
- CalGreen Low Flow Aerator and Low Lead Available
- Pop up waste included

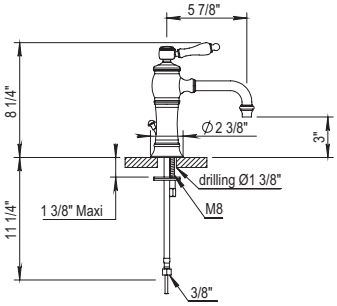

Emily Single Lever Vessel Mixer

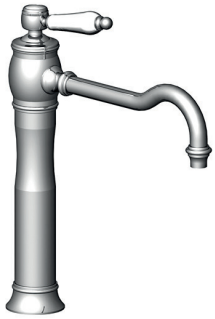

100.01.703

PC	$1320
PN	$1385
BN	$1535
Group 1	$1975
Group 2	$2530

- Swivel Spout
- Ceramic Disc Cartridge
- Flow Rate: 2.2 GPM
- All Metal Handle Available
- CalGreen Low Flow Aerator and Low Lead Available
- **Drain is Not Included**
- Lift And Turn Drain Available On Request HOP92.023 (p.101)

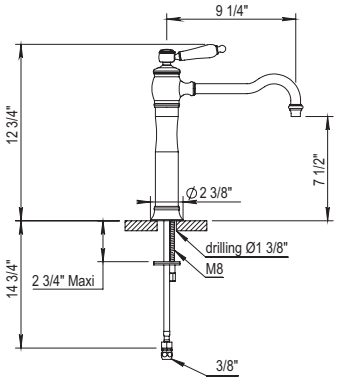

Emily Single Lever Vessel Mixer

100.02.703

PC	$1320
PN	$1385
BN	$1535
Group 1	$1975
Group 2	$2530

- Swivel Spout
- Ceramic Disc Cartridge
- Flow Rate: 2.2 GPM
- All Metal Handle Available
- CalGreen Low Flow Aerator and Low Lead Available
- **Drain is Not Included**
- Lift And Turn Drain Available On Request HOP92.023 (p.101)

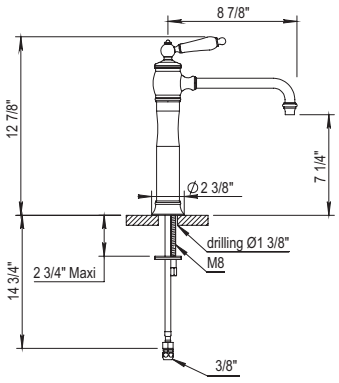

✓ **NOTE!** This check mark symbol indicates IN STOCK

Group 1: UB / AB / GAB / MC / GC **Group 2:** GB / CB / PG / MG

66 | 67 Saint Germain

Widespread Wallmount Mixer

100.02.263

PC	$1395
PN	$1465
BN	$1565
Group 1	$2025
Group 2	$2595

- ¼-Turn Ceramic Disc
- Lift & Turn Drain Included
- Fixed Spout
- Flow Rate: 2.2 GPM
- CalGreen Low Flow Aerator Available

Trim Onıy available: i.e. 100.02.263PN-**TO**
Deduct $360 from list price for Trim only Pricing.
Roughs available:
100.92.046BT & 100.92.048BT (Page 81)

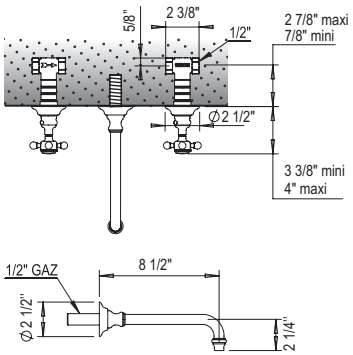

3 Hole Gooseneck Basin Mixer

102.66.208

PC	$1555
PN	$1620
BN	$1740
Group 1	$2250
Group 2	$2885

- Swivel Spout
- ¼-Turn Ceramic Disc
- Flow Rate: 2.2 GPM
- CalGreen Low Flow
- Pop up waste included

Aerator and Low Lead Available

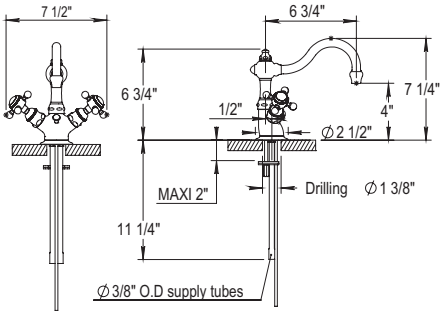

3 Hole Wall Mounted Basin Mixer

102.66.231
160.67.231
161.67.231
162.67.231

PC	$505
PN	$540
BN	$590
Group 1	$735
Group 2	$940

- Fix Spout
- ¼-Turn Ceramic Disc
- No Aerator

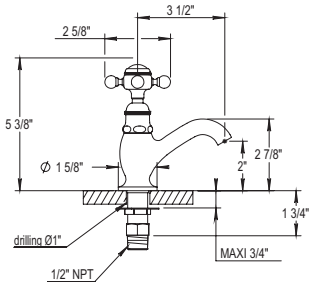

2 Hole Bridge Basin Mixer

102.66.311

PC	$1435
PN	$1495
BN	$1595
Group 1	$2080
Group 2	$2665

- Swivel Spout
- ¼-Turn Ceramic Disc
- 40º Rotating Aerator
- Pop up waste included

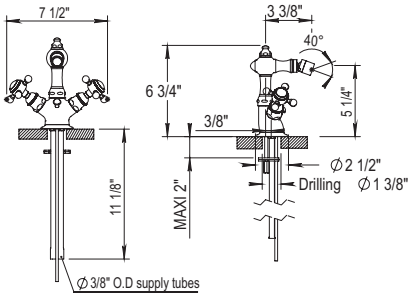

Accessories on page 85

66 | 67 Saint Germain

Exposed Wall Mounted Tub Filler with Handshower

66.434: Middle handle Lever
67.434: Middle handle Cross

102.66.434
160.67.434
161.67.434
162.67.434

PC	$3940
PN	$4235
BN	$4385
Group 1	$5715
Group 2	$7320

- Fixed Spout
- ¼-Turn Ceramic Disc
- 59” Shower Hose
- Flow Rate: 11 GPM
- Vacuum Breaker Built Inside the Body
- All Metal Handle Available
- Anti-calcium Handshower

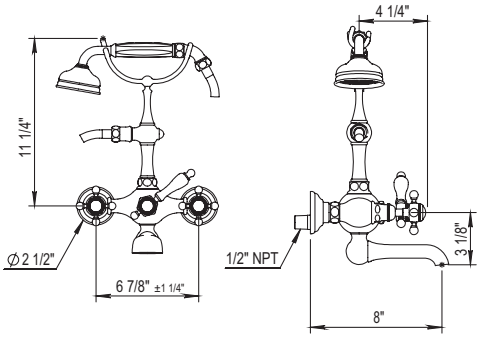

Exposed Deck Mounted Tub Filler with Handshower

66.435: Middle handle Lever
67.435: Middle handle Cross

102.66.435
160.67.435
161.67.435
162.67.435

PC	$4530
PN	$4790
BN	$4960
Group 1	$6685
Group 2	$8570

- Fixed Spout
- ¼-Turn Ceramic Disc
- 59” Shower Hose
- Excentrical Centers ± 1”
- Flow Rate: 11 GPM
- Vacuum Breaker Built Inside The Body
- All Metal Handle Available
- Anti-calcium Handshower

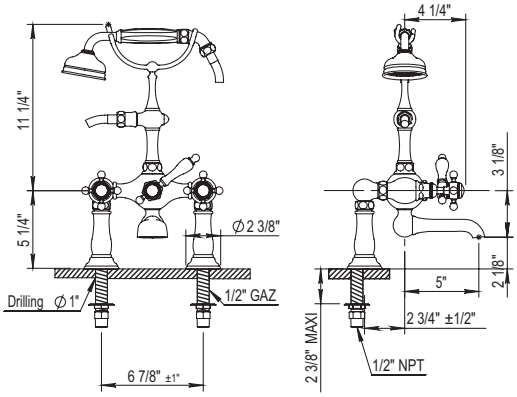

Exposed Floor Mounted Tub Filler with Handshower

102.66.498
160.67.498
161.67.498
162.67.498

PC	$5210
PN	$5355
BN	$5930
Group 1	$7690
Group 2	$9850

- Fixed Spout
- ¼-Turn Ceramic Disc
- 59” Shower Hose
- ¾” NPT Connections
- Flow Rate: 11 GPM
- Vacuum Breaker Built Inside The Body
- All Metal Handle Available
- Anti-calcium Handshower

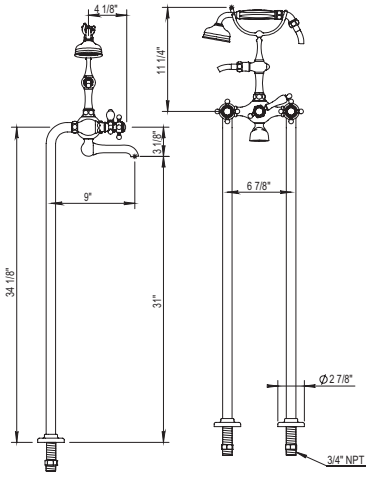

T-Connector for Floor Risers

100.00.499

PC	$875
PN	$935
BN	$1035
Group 1	$1265
Group 2	$1620

- Drain Diameter: 1” min to 1 ½” max

Floor installed version on page 61

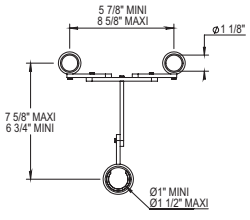

66 | 67 Saint Germain

Metal Cross **102.66.** | Metal Lever **160.67.** | White Porcelain Lever **161.67.** | Black Porcelain Lever **162.67.**

4 Hole Deck Tub Shower Set with Handshower

102.66.464	**PC**	$2835
160.67.464	**PN**	$2930
161.67.464	**BN**	$3105
162.67.464	**Group 1**	$4110
	Group 2	$5270

ANTI-SCALE NOZZLES

- ¾" ¼-Turn Ceramic Disc
- Fixed Spout with Integrated Diverter
- Retractable handshower with 79" Hose
- Flow Rate: 14 GPM
- All Metal Handle Available
- Anti-calcium Handshower

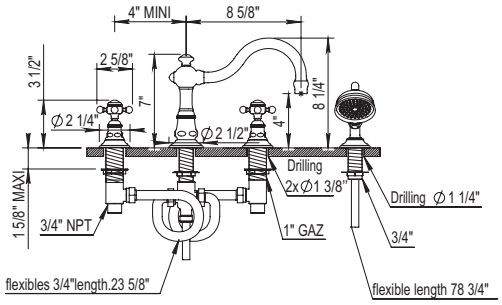

3 Hole Deck Tub Shower Set

102.66.463	**PC**	$1975
160.67.463	**PN**	$2025
161.67.463	**BN**	$2130
162.67.463	**Group 1**	$2860
	Group 2	$3665

- Fixed Spout
- Includes T Connection
- Includes Hoses
- Flow Rate: 14 GPM
- ¼-Turn Ceramic Disc

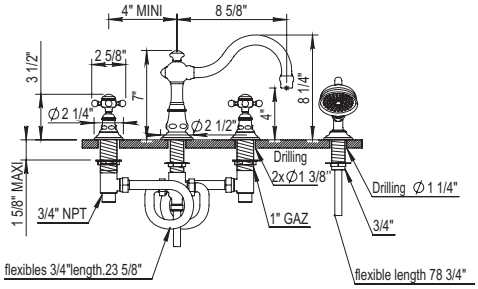

3 Hole Wall Mounted Basin Mixer

102.07.471	**PC**	$505
	PN	$535
	BN	$585
	Group 1	$735
	Group 2	$940

- Solid Brass
- ¾" Female NPT Inlet

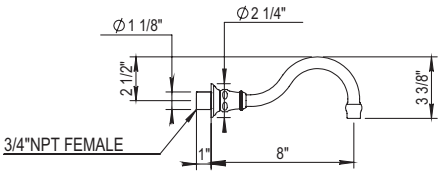

Accessories on page 85

66 | 67 Saint Germain

Exposed Thermostatic Shower with Tub Spout

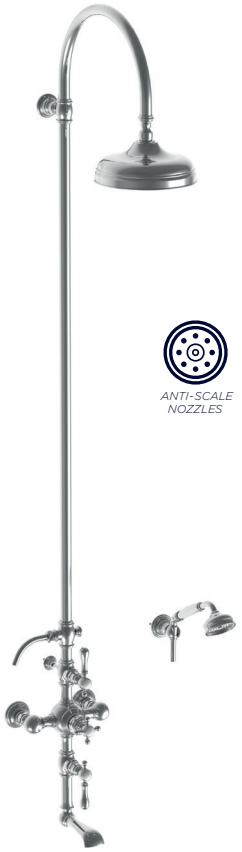

ANTI-SCALE NOZZLES

160.67.754-10	**PC**	$8525
161.67.754-10	**PN**	$8995
162.67.754-10	**BN**	$9895
	Group 1	$13595
	Group 2	$15775

- Two ¼-Turn Ceramic Disc Volume Control
- 10.6” Showerhead
- 60” Handshower Hose
- Integrated Diverter for Anti-calcium Handshower
- Includes Handshower, Hose and Wall Hook
- Flow Rate: 9 GPM
- All Metal Handle Available
- **Integrated Service Stops**
- Showerhead Restrictor Available Upon Request
- Option to change to 8’’ by ordering **160/161/162.67.754**
- Showerhead with 50° rotating ball joint

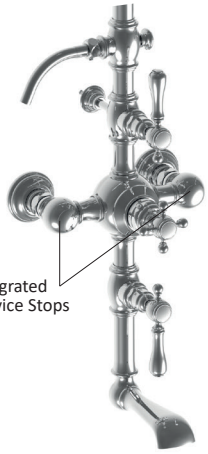

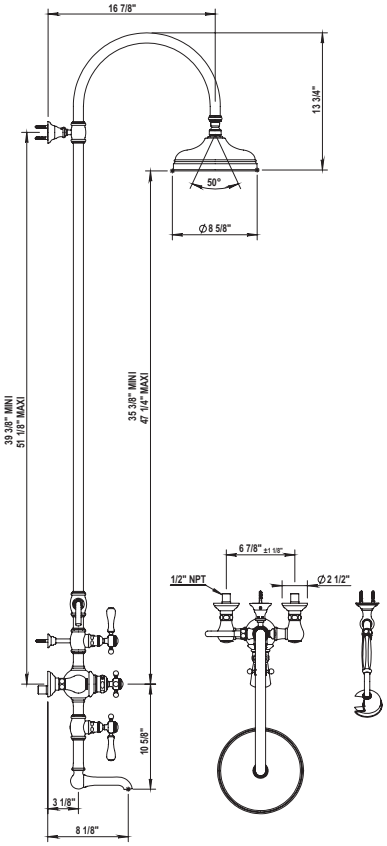

Exposed Thermostatic Shower with Handshower

ANTI-SCALE NOZZLES

160.67.744-10	**PC**	$9995
161.67.744-10	**PN**	$10995
162.67.744-10	**BN**	$11595
	Group 1	$16995
	Group 2	$19995

- Two ¼-Turn Ceramic Disc Volume Control
- 10.6” Showerhead
- 60” Handshower Hose
- Includes Anti-calcium Handshower, Hose and Wall Hook
- Flow Rate : 9 GPM
- All Metal Handle Available
- Integrated Service Stops
- Can Come Plugged Under Second Volume Control With Hand Shower And Hose Separate Upon Request
- Showerhead Restrictor Available Upon Request
- Option to change to 8’’ by ordering **160/161/162.67.744**
- Showerhead with 50° rotating ball joint

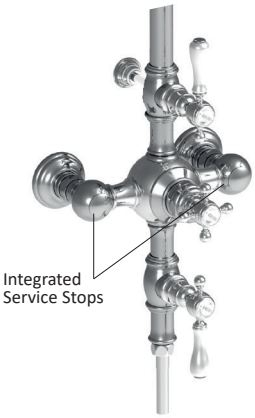

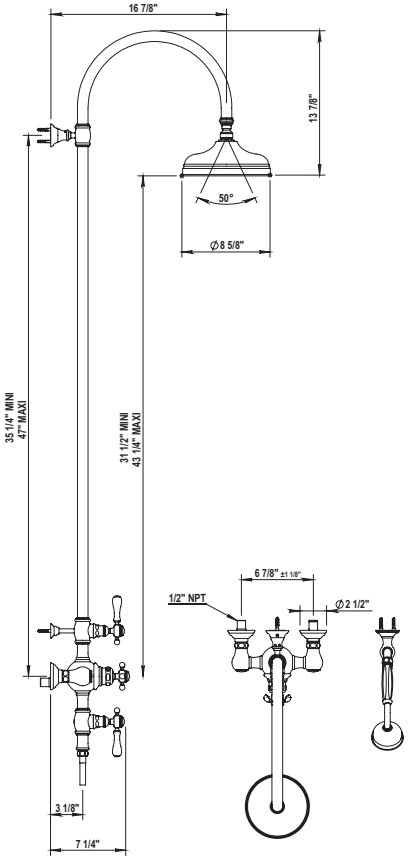

66 | 67 Saint Germain

3/4'' Thermostatic - Trim Plate Only

102.66.521	**PC**	$1130
160.67.521	**PN**	$1175
161.67.521	**BN**	$1235
162.67.521	**Group 1**	$1645
	Group 2	$2110

Solid Brass Trim Plate.

Requires mixing valve
100.92.591BT
or 102.92.524BT See page 80 for details

100.92.591	**BT**	$595 ✓
or 102.92.524	**BT**	$2395

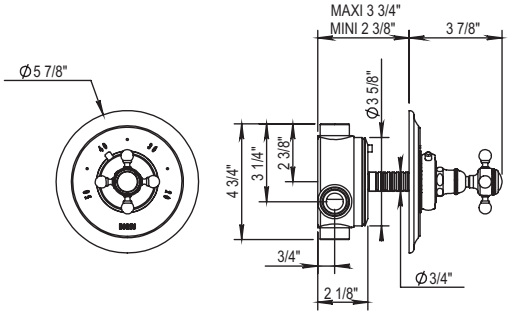

3/4'' Thermostatic with Integrated Diverter - Trim Plate Only

102.66.502	**PC**	$1620
160.67.502	**PN**	$1770
161.67.502	**BN**	$2060
162.67.502	**Group 1**	$2355
	Group 2	$3020

- Single Function 2 Way Diverter
- Solid Brass
- Safety Stop @ 37 °C (99°F)

Requires mixing valve 100.92.593BT
See page 80 for details

100.92.593	**BT**	$1395 ✓

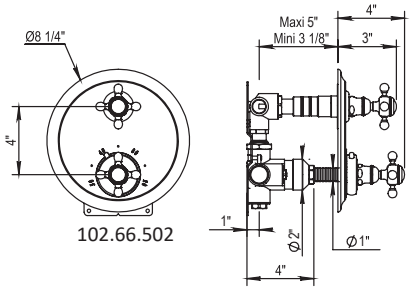

3/4'' Thermostatic with Integrated Diverter - Trim Plate Only

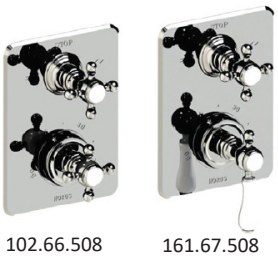

102.66.508	**PC**	$1695
160.67.508	**PN**	$1850
161.67.508	**BN**	$2450
162.67.508	**Group 1**	$2645
	Group 2	$3390

- Single Function 2 Way Diverter
- Solid Brass
- Safety Stop @ 37 °C (99°F)

Requires mixing valve 100.92.593BT
See page 80 for details

100.92.599	**BT**	$1450 ✓

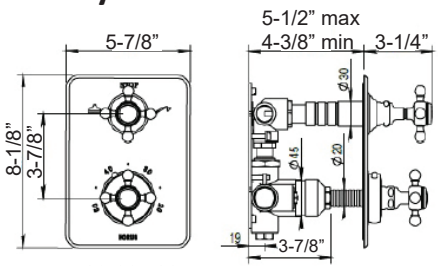

3/4'' Thermostatic with Integrated Diverter - Trim Plate Only

102.66.529	**PC**	$1640
160.67.529	**PN**	$1785
161.67.529	**BN**	$2085
162.67.529	**Group 1**	$2380
	Group 2	$3050

- Single Function 3 Way Diverter
- Solid Brass
- Safety Stop @ 37 °C (99°F)

Requires mixing valve 100.92.599BT
See page 80 for details

100.92.599	**BT**	$1450 ✓

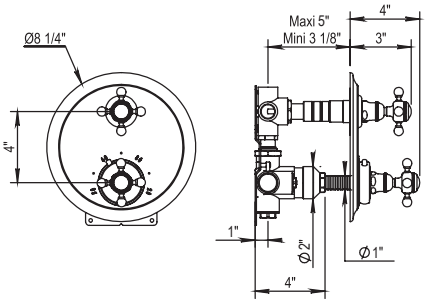

Accessories on page 85

66 | 67 Saint Germain

3/4'' Thermostatic - Trim Plate Only

102.66.507	**PC**	$1450
160.67.507	**PN**	$1640
161.67.507	**BN**	$1695
162.67.507	**Group 1**	$2250
	Group 2	$2740

Solid Brass Trim Plate.

Requires mixing valve
100.92.591BT
or 102.92.524BT See page 80 for details

100.92.591	**BT**	$595 ✓
or 102.92.524	**BT**	$2395

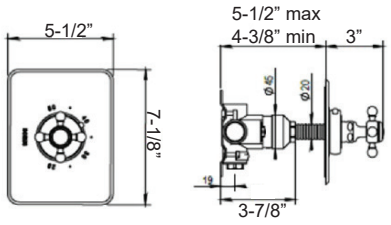

3/4'' Thermostatic - Trim Plate Only

160.67.527	**PC**	$1860
161.67.527	**PN**	$1960
162.67.527	**BN**	$2000
	Group 1	$2700
	Group 2	$3460

- Solid Brass
- Volume Controls Must Be Cross Handles
- Plate is Reversible

Requires mixing valve 100.92.597BT
See page 80 for details

100.92.597	**BT**	$1595 ✓

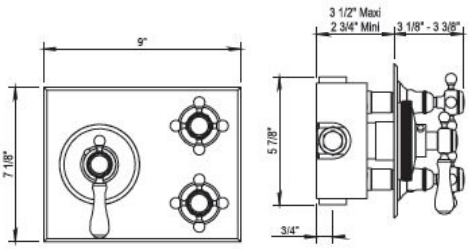

Volume Control- Trim Only

102.66.578	**PC**	$365
160.67.578	**PN**	$390
161.67.578	**BN**	$420
162.67.578	**Group 1**	$535
	Group 2	$685

- Trim for ½" or ¾" Volume Control Roughs
- Trim for in Wall Diverters

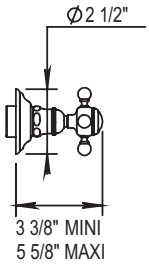

Requires one of the following mixing valves:
See page 81 for details

100.92.046	**BT**	$180 ✓	(1/2'' VC closing clockwise)
100.92.048	**BT**	$205	(1/2'' VC closing counter-clockwise)
100.92.047	**BT**	$180 ✓	(3/4'' VC closing clockwise)
100.92.049	**BT**	$205	(3/4'' VC closing counter-clockwise)
100.92.030	**BT**	$540	(1/2'' 2 function diverter)
100.92.090	**BT**	$595	(1/2'' 3 function diverter)

66 | 67 Saint Germain

Vintage Handshower & Fixed Handshower Holder

ANTI-SCALE NOZZLES

100.01.589

- Wall Union
- 59'' Metal Hose
- Fixed Handshower Holder
- Flow Rate: 2.2 GPM
- All Metal Handle Available
- Anti-calcium Handshower

PC	$865
PN	$895
BN	$990
Group 1	$1290
Group 2	$1655

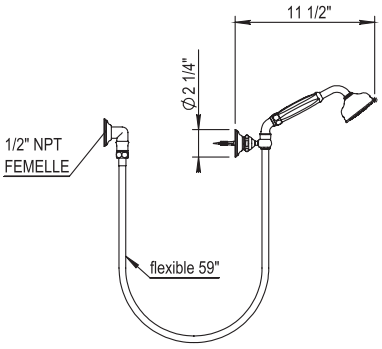

Vintage Handshower & Sliding Bar

ANTI-SCALE NOZZLES

100.01.532

- Wall Union
- 59'' Metal Hose
- Swiveling Handshower Holder
- 23 5/8'' Sliding Wall Bar
- All Metal Handle Available
- Anti-calcium Handshower

PC	$1350
PN	$1395
BN	$1520
Group 1	$2025
Group 2	$2595

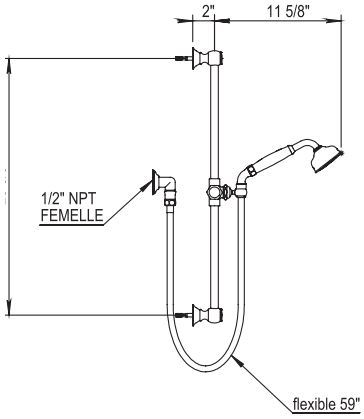

Massage Body Spray

ANTI-SCALE NOZZLES

100.00.573

- 1/2'' NPT Adaptor Connection
- Anti-Calcium Massage Body Spray

PC	$245
PN	$280
BN	$345
Group 1	$375
Group 2	$435

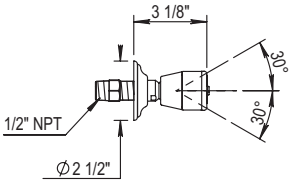

Accessories on page 85

66 | 67 Saint Germain Shower Kits

161.67.001

10” shower head with ceiling mounted arm, wall shower set, and 2 function thermostatic trim & rough

102.66.001	**PC**	$5625
160.67.001	**PN**	$6015
161.67.001	**BN**	$6720
162.67.001	**Group 1**	$7655
	Group 2	$9400

Components Included

B006976	Showerhead
100.92.540	Ceiling Arm
100.01.532	Wallshower set
102.66/67.502	Thermostatic Trim
100.92.593BT	Thermostatic Rough

Rough and Trim Kits can be sold Seperately.

Rough-In:
100.92.593BT $1395

Trim Kit:
102.66.001-TR or
161.67.001-TR etc
Deduct $1395 from Full kit

6” shower head with angled wall mounted arm, wall shower set, thermostatic trim & rough and 2 shut offs.

102.66.002	**PC**	$5425
160.67.002	**PN**	$5745
161.67.002	**BN**	$6290
162.67.002	**Group 1**	$7645
	Group 2	$9380

Components Included

100.92.945	6” Showerhead
100.92.960	Angled Wall arm
100.01.532	Wallshower set
102.66/67.521	Thermostatic Trim
100.92.591BT	Thermostatic Rough
2x 102.66/67.578	Volume Control Trim
2x 100.92.046BT	Volume Control Rough

Rough and Trim Kits can be sold Seperately.

Rough Kit:
102.00.002 $955

Trim Kit:
102.66.002-TR or
161.67.002-TR etc
Deduct $955 from Full kit

4⅛” shower head with angled wall mounted arm, wall shower set, thermostatic trim & rough and 2 shut offs.

102.66.003	**PC**	$4725
160.67.003	**PN**	$5000
161.67.003	**BN**	$5460
162.67.003	**Group 1**	$6535
	Group 2	$8035

Components Included

100.92.435	4⅛” Showerhead
100.92.960	Angled Wall arm
100.01.589	Wallshower set
102.66/67.521	Thermostatic Trim
100.92.591BT	Thermostatic Rough
2x 102.66/67.578	Volume Control Trim
2x 100.92.046BT	Volume Control Rough

Rough and Trim Kits can be sold Seperately.

Rough Kit:
102.00.002 $955

Trim Kit:
102.66.003-TR or
161.67.003-TR etc
Deduct $955 from Full kit

Ascott

3 Hole Basin Mixer High Spout

102.62.261

102.65.261

- Fixed Spout
- ¼-Turn Ceramic Disc
- Flow Rate: 2.2 GPM
- Pop up waste included
- CalGreen Low Flow Aerator and Low Lead Available Upon Request

PC	$1790
PN	$1825
BN	$1925
Group 1	$2550
Group 2	$3265

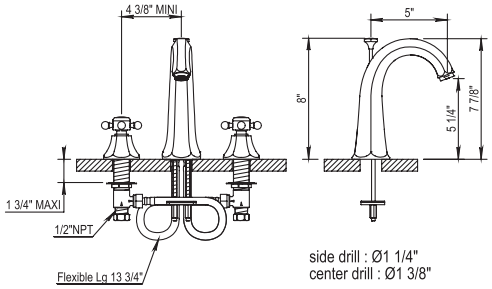

3 Hole Basin Mixer Low Spout

102.62.260

102.35.260

- Fixed Spout
- ¼-Turn Ceramic Disc
- Flow Rate: 2.2 GPM
- Pop up waste included
- CalGreen Low Flow Aerator Upon Request

PC	$1720
PN	$1790
BN	$1895
Group 1	$2495
Group 2	$3200

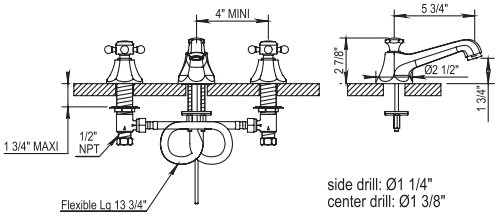

Single Hole Basin Mixer High Spout

102.65.708

- Fixed Spout
- ¼-Turn Ceramic Disc
- Flow Rate: 2.2 GPM
- Pop up waste included
- CalGreen Low Flow Aerator Upon Request

PC	$1270
PN	$1330
BN	$1400
Group 1	$1845
Group 2	$2365

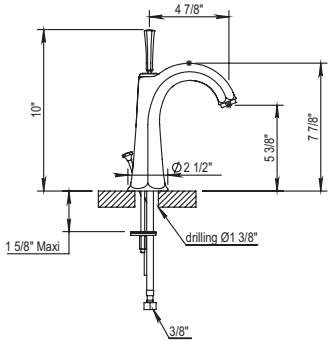

Exposed Wall Mounted Tub Filler with Handshower

ANTI-SCALE NOZZLES

102.62.434

102.65.434

- Fixed Spout
- ¼-Turn Ceramic Disc
- Excentrical centers ± **1 ¼”**
- 59” Shower Hose
- Flow Rate: 11 GPM
- Vacuum Breaker Built Inside the Body
- All Metal Handle Available
- Anti-calcium Handshower

62.434: Middle handle Lever
65.434: Middle handle Cross

PC	$2970
PN	$3115
BN	$3205
Group 1	$4145
Group 2	$5310

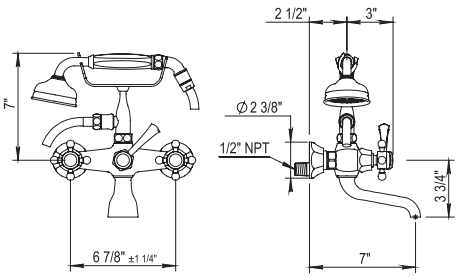

Exposed Deck Mounted Tub Filler with Handshower

ANTI-SCALE NOZZLES

102.62.435

102.65.435

- Fixed Spout
- ¼-Turn Ceramic Disc
- Flow Rate: 11 GPM
- Vacuum Breaker Built Inside the Body
- All Metal Handle Available
- Anti-calcium Handshower

62.435: Middle handle Lever
65.435: Middle handle Cross

PC	$3385
PN	$3530
BN	$3735
Group 1	$4995
Group 2	$6395

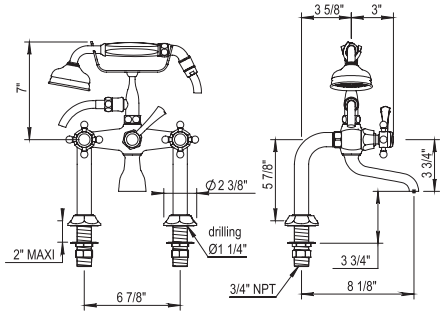

Exposed Floor Mounted Tub Filler with Handshower

ANTI-SCALE NOZZLES

102.62.498

102.65.498

- Fixed Spout
- ¼-Turn Ceramic Disc
- 59” Shower Hose
- ¾’’ NPT Connections
- Flow Rate: 11 GPM
- Vacuum Breaker Built Inside the Body
- All Metal Handle Available
- Anti-calcium Handshower

PC	$3890
PN	$4035
BN	$4180
Group 1	$5580
Group 2	$7150

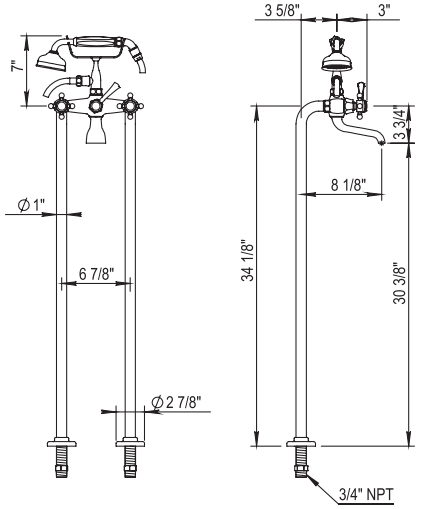

T-Connector for Floor Risers

100.00.499

- Drain Diameter: 1” min to 1 ½” max

Floor installed version on page 61

PC	$875
PN	$935
BN	$1035
Group 1	$1265
Group 2	$1620

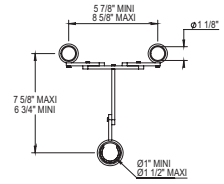

Accessories on page 87

4 Hole Deck Mounted Tub Filler

102.62.464

102.65.464

- ¼-Turn Ceramic Disc
- Fixed Spout with Integrated Diverter
- Retractable Handshower with 79” Hose
- Flow Rate: 14 GPM
- All Metal Handle Available
- Anti-calcium Handshower

ANTI-SCALE NOZZLES

PC	$2795
PN	$2895
BN	$3095
Group 1	$4240
Group 2	$5110

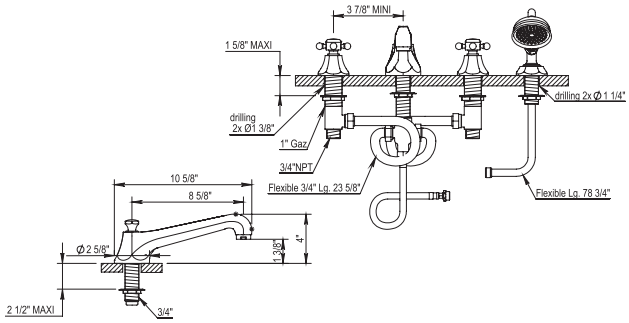

8’’ Tub Spout

102.20.471

- Solid Brass
- ¾” Female NPT

PC	$1075
PN	$1115
BN	$1190
Group 1	$1695
Group 2	$2170

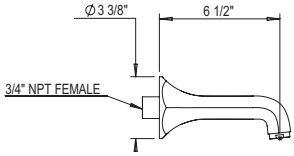

Exposed Thermostatic Valve with Handshower

102.65.745-10

- 10.6” Showerhead
- 60” Handshower Hose
- Includes Anti-calcium Handshower, Hose and Wall Hook
- Flow Rate: 9 GPM
- All Metal Handle Available
- Can Come Plugged Under Second Volume Control With Hand Shower And Hose Separate upon request
- Showerhead Restrictor Available Upon Request
- Option to change to 8’’ Showerhead by ordering **102.65.745**
- Showerhead with 50° rotating ball joint

ANTI-SCALE NOZZLES

PC	$6295
PN	$6675
BN	$7395
Group 1	$9995
Group 2	$11890

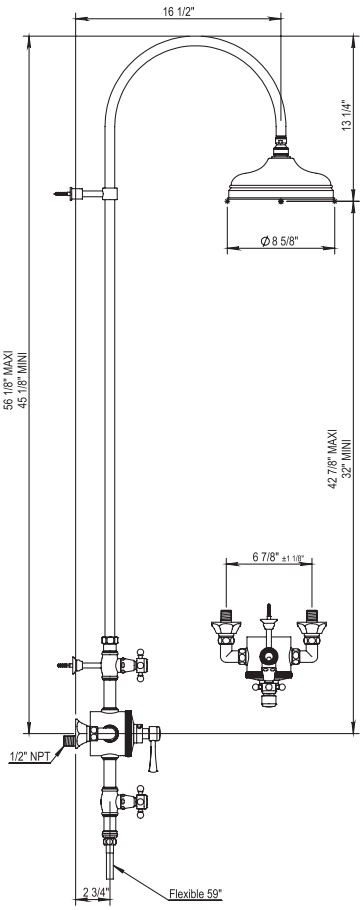

✓ **NOTE!** This check mark symbol indicates IN STOCK

Group 1: UB / AB / GAB / MC / GC **Group 2:** GB / CB / PG / MG

3/4'' Thermostatic - Trim Plate Only

102.62.521	PC	$1190
	PN	$1245
102.65.521	BN	$1310
	Group 1	$1850
	Group 2	$2370

Solid Brass Trim Plate.

Requires mixing valve
100.92.591BT
or 102.92.524BT See page 80 for details

100.92.591	**BT**	$595 ✓
or 102.92.524	**BT**	$2395

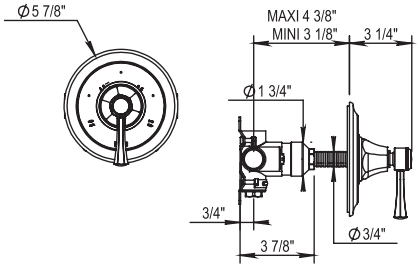

3/4'' Thermostatic with Integrated Diverter - Trim Plate Only

62.523 is lever on bottom,
and cross on top
65.523 has 2 levers

102.62.523	PC	$1475
	PN	$1695
102.65.523	BN	$1860
	Group 1	$2360
	Group 2	$3025

- Single Function 2 Way Diverter
- Solid Brass
- Safety Stop @ 37 °C (99°F)

Requires mixing valve 100.92.593BT
See page 80 for details

100.92.593	**BT**	$1395 ✓

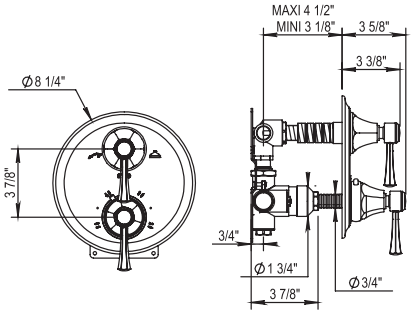

3/4'' Thermostatic with Integrated Diverter - Trim Plate Only

62.529 is lever on bottom,
and cross on top
65.529 has 2 levers

102.62.529	PC	$1570
	PN	$1695
102.65.529	BN	$1930
	Group 1	$2380
	Group 2	$3050

- Single Function 3 Way Diverter
- Solid Brass
- Safety Stop @ 37 °C (99°F)

Requires mixing valve 100.92.599BT
See page 80 for details

100.92.599	**BT**	$1450 ✓

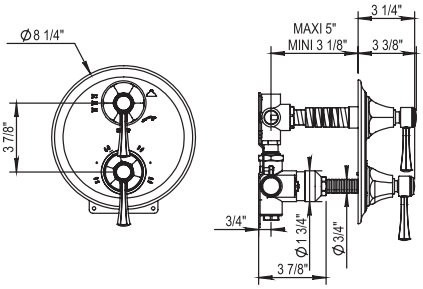

3/4'' Thermostatic - Trim Plate Only

102.65.527	PC	$1745
	PN	$1840
	BN	$1995
	Group 1	$2645
	Group 2	$3385

- Solid Brass
- Volume Controls Must Be Cross Handles
- Plate is Reversible

Requires mixing valve 100.92.597BT
See page 80 for details

100.92.597	**BT**	$1595 ✓

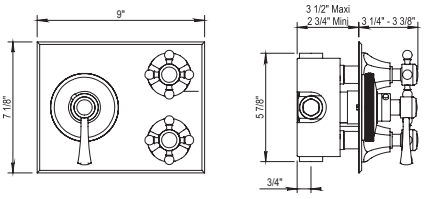

Accessories on page 87

3/4'' Thermostatic - Trim Plate Only

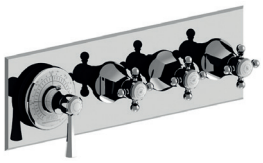

102.65.519

PC	$2250
PN	$2595
BN	$3150
Group 1	$3520
Group 2	$4510

Solid Brass Trim Plate.
Reversible.
Service stops for each outlet

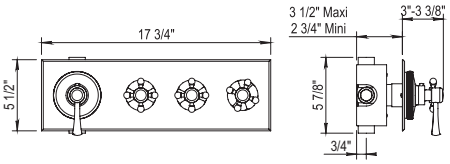

Requires mixing valve
100.92.583BT

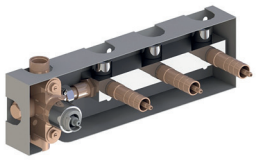

100.92.583 **BT** $1995

- 3/4'' NPT Inlets
- 3x 1/2'' NPT Outlets
- 14GPM @ 45PSI
- 1 Outlet Plug Supplied
- Integrated Service Stops for each Outlet

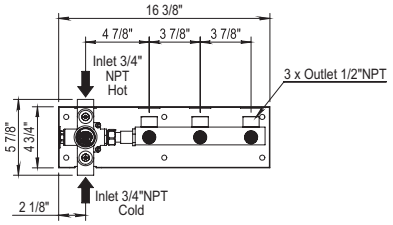

3/4'' Thermostatic - Trim Plate Only

102.65.520

PC	$2680
PN	$3085
BN	$3750
Group 1	$4250
Group 2	$5200

Solid Brass Trim Plate.
Reversible.
Service stops for each outlet

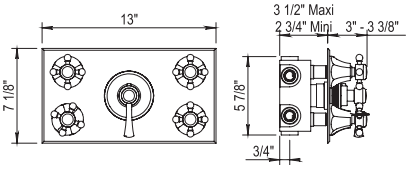

Requires mixing valve
100.92.584BT

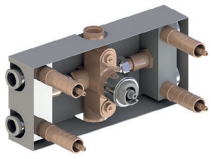

100.92.584 **BT** $2390

- 3/4'' NPT Inlets
- 4x 1/2'' NPT Outlets
- 14GPM @ 45PSI
- 1 Outlet Plug Supplied
- Integrated Service Stops for each Outlet

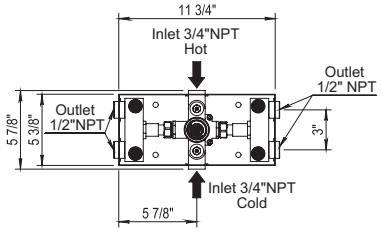

Volume Control- Trim Only

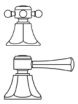

102.62.578
102.35.578

PC	$430
PN	$445
BN	$495
Group 1	$695
Group 2	$860

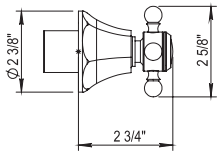

- Trim for ½" or ¾" Volume Control Roughs
- Trim for in Wall Diverters

Requires one of the following mixing valves:
See page 81 for details

100.92.046	**BT**	$180 ✓	(1/2'' VC closing clockwise)
100.92.048	**BT**	$205	(1/2'' VC closing counter-clockwise)
100.92.047	**BT**	$180 ✓	(3/4'' VC closing clockwise)
100.92.049	**BT**	$205	(3/4'' VC closing counter-clockwise)
100.92.030	**BT**	$540	(1/2'' 2 function diverter)
100.92.090	**BT**	$595	(1/2'' 3 function diverter)

Vintage Handshower & Fixed Handshower Holder

102.62.589

PC	$825
PN	$850
BN	$895
Group 1	$1225
Group 2	$1540

- Wall Union
- 59'' Metal Hose
- Fixed Handshower Holder
- Flow Rate: 2.2 GPM
- All Metal Handle Available
- Anti-calcium Handshower

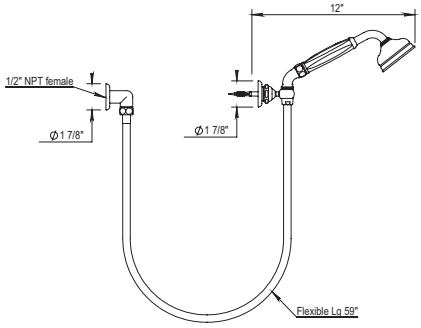

Vintage Handshower & Sliding Bar

102.62.532

PC	$1395
PN	$1475
BN	$1595
Group 1	$2125
Group 2	$2725

- Wall Union
- 59'' Metal Hose
- Swiveling Handshower Holder
- 23 5/8'' Sliding Wall Bar
- All Metal Handle Available
- Anti-calcium Handshower

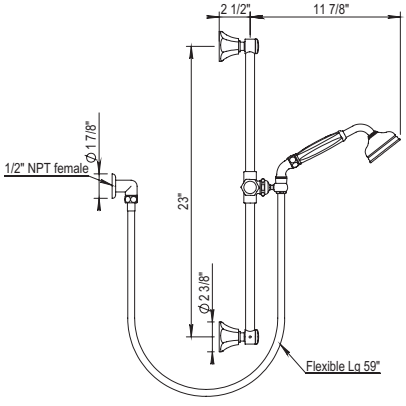

Accessories on page 87

62 | 65 Ascott Shower Kits

10” shower head with ceiling mounted arm, wall shower set, and 2 function thermostatic trim & rough

102.65.001

PC	$5995
PN	$6365
BN	$6930
Group 1	$8245
Group 2	$10095

Components Included

B006976	Showerhead
100.92.540	Ceiling Arm
102.62.532	Wallshower set
102.65.527	Thermostatic Trim
100.92.597BT	Thermostatic Rough

Rough and Trim Kits can be sold Seperately.

Rough-In:
100.92.597BT $1595

Trim Kit:
102.65.001-TR
Deduct $1595 from Full kit

6” shower head with angled wall mounted arm, wall shower set, thermostatic trim & rough and 2 shut offs.

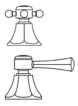

102.62.002
102.65.002

PC	$5660
PN	$6005
BN	$6590
Group 1	$8100
Group 2	$9970

Components Included

100.92.945	6” Showerhead
100.92.960	Angled Wall arm
102.62.532	Wallshower set
102.62/65.521	Thermostatic Trim
100.92.591BT	Thermostatic Rough
2x 102.62/35.578	Volume Control Trim
2x 100.92.046BT	Volume Control Rough

Rough and Trim Kits can be sold Seperately.

Rough Kit:
102.00.002 $955

Trim Kit:
102.62.002-TR or
102.65.002-TR etc
Deduct $955 from Full kit

4⅛” shower head with angled wall mounted arm, wall shower set, thermostatic trim & rough and 2 shut offs.

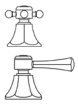

102.62.003
102.65.003

PC	$4875
PN	$5135
BN	$5590
Group 1	$6825
Group 2	$8380

Components Included

100.92.435	4⅛” Showerhead
100.92.960	Angled Wall arm
102.62.589	Wallshower set
102.07/50.521	Thermostatic Trim
100.92.591BT	Thermostatic Rough
2x 102.62/35.578	Volume Control Trim
2x 100.92.046BT	Volume Control Rough

Rough and Trim Kits can be sold Seperately.

Rough Kit:
102.00.002 $955

Trim Kit:
102.62.003-TR or
102.65.003-TR etc
Deduct $955 from Full kit

Anthea

Now available in USA!

06 | 10 Anthea New to USA!

3 Hole Basin Mixer

100.06.260

100.10.260

- Swivel Spout
- ¼-Turn Ceramic Disc
- Flow Rate: 2.2 GPM
- Pop up waste included

ECO 8L / mn

PC	$2195
PN	$2295
BN	$2395
Group 1	$3180
Group 2	$4075

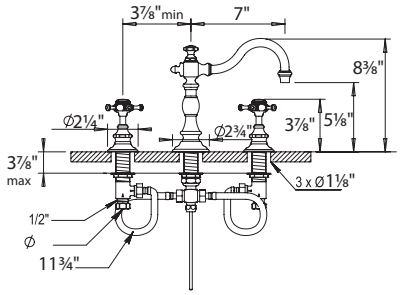

3 Hole Wall Mounted Basin Mixer

100.06.262

100.10.262

- Swivel Spout
- ¼-Turn Ceramic Disc
- Lift & Turn Drain Included
- Flow Rate: 2.2 GPM

ECO 8L / mn

Trim Only available: i.e. 100.06.262PN-**TO**

Deduct $360 from list price for Trim only Pricing.
Roughs available: 100.92.046BT & 100.92.048BT (Page 81)

PC	$2060
PN	$2165
BN	$2335
Group 1	$2990
Group 2	$3830

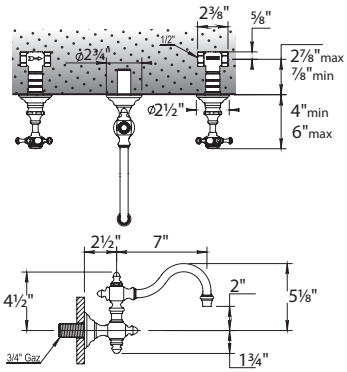

Single Hole Basin Mixer

100.06.208

- Swivel Spout
- ¼-Turn Ceramic Disc
- Lift & Turn Drain Included
- Flow Rate: 2.2 GPM
- CalGreen Low Flow Aerator Upon Request

ECO 8L / mn

PC	$1905
PN	$2000
BN	$2180
Group 1	$2755
Group 2	$3535

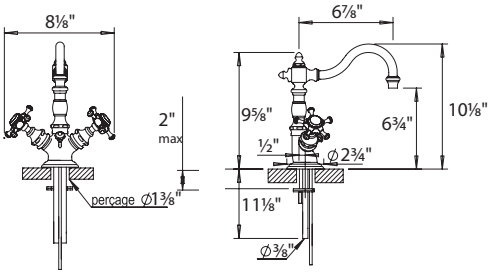

Single Hole Two Handle Bidet Mixer

100.06.311

- Swivel Spout
- ¼-Turn Ceramic Disc
- 40° Rotating Aerator
- Pop up waste included

PC	$1655
PN	$1760
BN	$1930
Group 1	$2430
Group 2	$2890

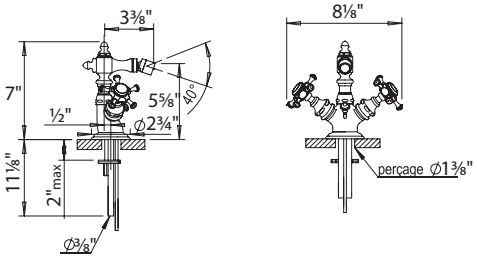

Exposed Wall Mounted Tub Filler with Handshower

100.06.434

100.10.434

- Fixed Spout
- ¼-Turn Ceramic Disc
- 59” Shower Hose
- Flow Rate: 11 GPM
- Vacuum Breaker in the Body
- Anti-calcium Handshower

06.434: Middle handle Lever
10.434: Middle handle Cross

PC	$4285
PN	$4490
BN	$4845
Group 1	$6220
Group 2	$7970

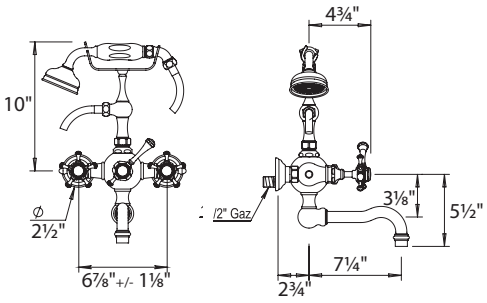

Exposed Deck Mounted Tub Filler with Handshower

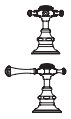

100.06.435

100.10.435

- Fixed Spout
- ¼-Turn Ceramic Disc
- 59” Shower Hose
- Flow Rate: 11 GPM
- Vacuum Breaker in the Body
- Anti-calcium Handshower

06.435: Middle handle Lever
10.435: Middle handle Cross

PC	$4995
PN	$5250
BN	$5640
Group 1	$7250
Group 2	$8595

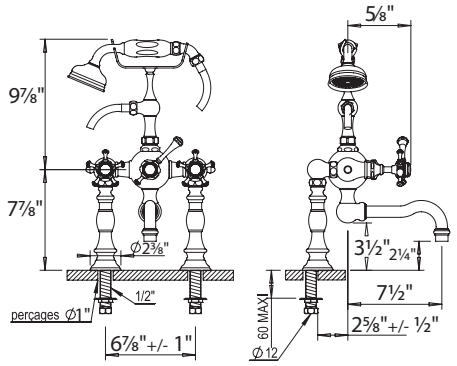

Exposed Floor Mounted Tub Filler with Handshower

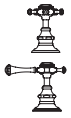

100.06.498

100.10.498

- Fixed Spout
- ¼-Turn Ceramic Disc
- 59” Shower Hose
- ¾” NPT Connections
- Flow Rate: 11 GPM
- Vacuum Breaker Built Inside the Body
- All Metal Handle Available
- Anti-calcium Handshower

PC	$5235
PN	$5500
BN	$6020
Group 1	$7595
Group 2	$9730

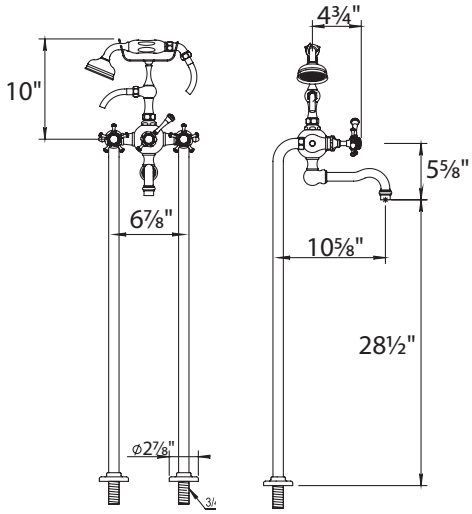

T-Connector for Floor Risers

100.00.499

- Drain Diameter: 1” min to 1 ½” max

Floor installed version on page 61

PC	$875
PN	$935
BN	$1035
Group 1	$1265
Group 2	$1620

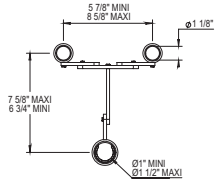

4 Hole Deck Tub Shower Set with Handshower

100.06.464

100.10.464

PC	$3475
PN	$3640
BN	$3920
Group 1	$5040
Group 2	$6460

- ¼-Turn Ceramic Disc
- Fixed Spout with Integrated Diverter
- Retractable handshower with 79” Hose
- Flow Rate: 14 GPM
- Anti-calcium Handshower

ANTI-SCALE NOZZLES

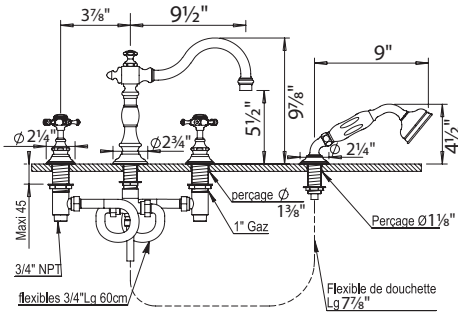

Wall Tub Spout

100.06.471

PC	$1025
PN	$1110
BN	$1200
Group 1	$1530
Group 2	$1960

- 9.5’’ Fixed Spout
- Solid Brass
- ¾’ Female NPT

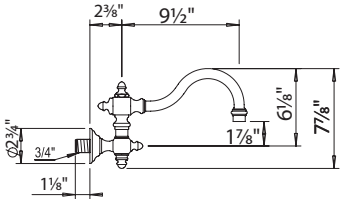

Exposed Thermostatic Shower with Handshower

ANTI-SCALE NOZZLES

100.06.544-10

100.10.544-10

PC	$5760
PN	$6095
BN	$6450
Group 1	$9215
Group 2	$10650

- Two ¼-Turn Ceramic Disc Volume Control
- 10.6” Showerhead
- 60” Handshower Hose
- Includes Anti-calcium Handshower, Hose and Wall Hook
- Flow Rate: 9 GPM
- All Metal Handle Available
- Integrated Service Stops
- Can Come Plugged Under Second Volume Control With Hand Shower And Hose Separate Upon Request.
- Showerhead restrictor Available Upon request
- Option to change to 8’’ showerhead by ordering **100.06.544/100.10.544**
- Showerhead with 50° rotating ball joint

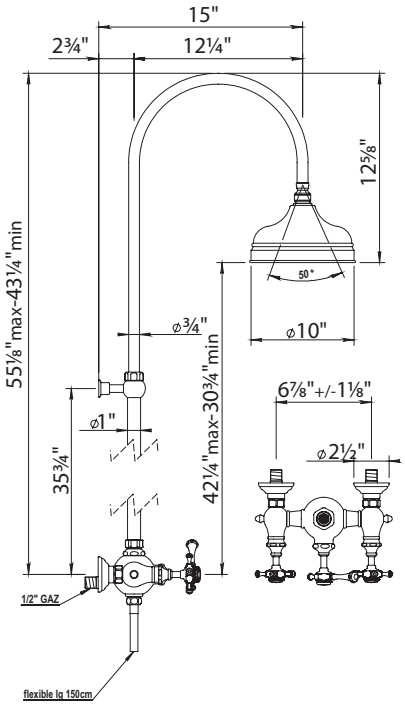

3/4'' Thermostatic - Trim Plate Only

100.06.521

	PC	$1925
	PN	$2035
	BN	$2150
	Group 1	$2800
	Group 2	$3585

- Solid Brass Trim Plate
- Integrated Service Stops
- Safety Stop @ 37 °C (99°F)

Requires mixing valve
100.92.591BT
or 102.92.524BT See page 80 for details

100.92.591	**BT**	$595✓
or 102.92.524	**BT**	$2395

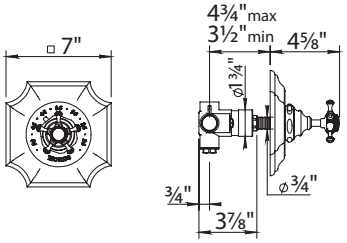

Volume Control- Trim Only

100.06.578
100.10.578

	PC	$475
	PN	$485
	BN	$585
	Group 1	$720
	Group 2	$920

- Trim for ½" or ¾" Volume Control Roughs
- Trim for in Wall Diverters

Requires one of the following mixing valves:
See page 81 for details

100.92.046	**BT**	$180 ✓	(1/2'' VC closing clockwise)
100.92.048	**BT**	$205	(1/2'' VC closing counter-clockwise)
100.92.047	**BT**	$180 ✓	(3/4'' VC closing clockwise)
100.92.049	**BT**	$205	(3/4'' VC closing counter-clockwise)
100.92.030	**BT**	$540	(1/2'' 2 function diverter)
100.92.090	**BT**	$595	(1/2'' 3 function diverter)

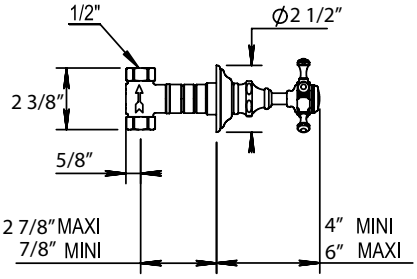

Vintage Handshower & Fixed Handshower Holder

ANTI-SCALE NOZZLES

100.01.589

	PC	$865
	PN	$895
	BN	$990
	Group 1	$1290
	Group 2	$1655

- Wall Union
- 59'' Metal Hose
- Fixed Handshower Holder
- Flow Rate: 2.2 GPM
- All Metal Handle Available
- Anti-calcium Handshower

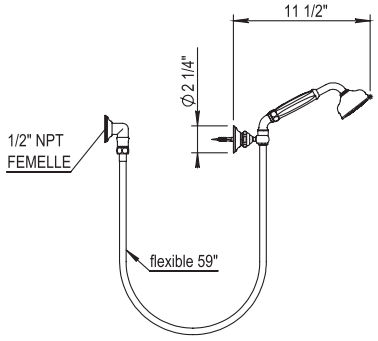

Vintage Handshower & Sliding Bar

ANTI-SCALE NOZZLES

100.01.532

	PC	$1350
	PN	$1395
	BN	$1520
	Group 1	$2025
	Group 2	$2595

- Wall Union
- 59'' Metal Hose
- Swiveling Handshower Holder
- 23 5/8'' Sliding Wall Bar
- All Metal Handle Available
- Anti-calcium Handshower

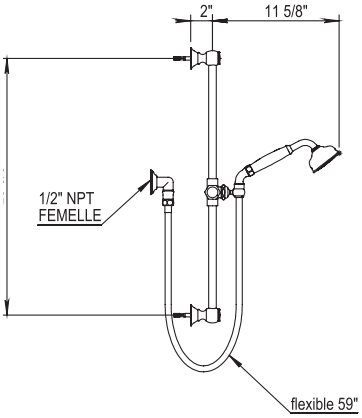

06 | 10 Anthea Shower Kits

10” shower head with ceiling mounted arm, wall shower set, thermostatic trim & rough and 2 shut offs.

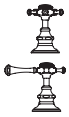

102.06.001
102.10.001

PC	$6440
PN	$6810
BN	$7540
Group 1	$9210
Group 2	$11365

Components Included

B006976	Showerhead
100.92.540	Ceiling Arm
100.01.532	Wallshower set
102.06.521	Thermostatic Trim
100.92.591BT	Thermostatic Rough
2x 102.06.578	Volume Control Trim
2x 100.92.046BT	Volume Control Rough

Rough and Trim Kits can be sold Seperately.

Rough Kit:
102.00.002 $955

Trim Kit:
102.06.001-TR or
102.10.001-TR etc
Deduct $955 from Full kit

6” shower head with angled wall mounted arm, wall shower set, thermostatic trim & rough and 2 shut offs.

102.06.002
102.10.002

PC	$5955
PN	$6295
BN	$7005
Group 1	$8435
Group 2	$10,385

Components Included

100.92.945	6” Showerhead
100.92.960	Angled Wall arm
100.01.589	Wallshower set
102.06.521	Thermostatic Trim
100.92.591BT	Thermostatic Rough
2x 102.06.578	Volume Control Trim
2x 100.92.046BT	Volume Control Rough

Rough and Trim Kits can be sold Seperately.

Rough Kit:
102.00.002 $955

Trim Kit:
102.06.002-TR or
102.10.002-TR etc
Deduct $955 from Full kit

Dover

3 Hole Gooseneck Basin Mixer

102.28.261

102.27.261

- Swivel Spout
- ¼-Turn Ceramic Disc
- Flow Rate: 2.2 GPM
- CalGreen Low Flow Aerator and Low Lead Available Upon Request
- Pop up waste included

PC	$1275
PN	$1315 ✓
BN	$1490
GB	$2380
Group 1	$1855
Group 2	$2380

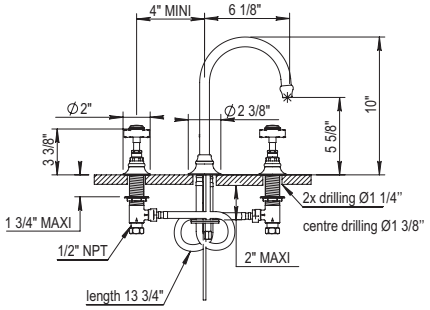

3 Hole Basin Mixer

102.26.260

102.27.260

- Fixed Spout
- ¼-Turn Ceramic Disc
- Flow Rate: 2.2 GPM
- CalGreen Low Flow Aerator and Low Lead Available Upon Request
- Pop up waste included

PC	$1275
PN	$1315
BN	$1490
Group 1	$1855
Group 2	$2380

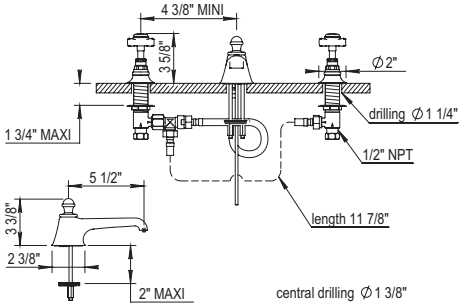

Single Hole Wall Mount Basin Mixer

102.28.262

102.27.262

- Swivel Spout
- ¼-Turn Ceramic Disc
- Lift & Turn Drain Included
- Flow Rate: 2.2 GPM
- CalGreen Low Flow Aerator and Low Lead Available Upon Request

PC	$1610
PN	$1685
BN	$1950
Group 1	$2575
Group 2	$3295

Trim Only available: i.e. 102.27.26PN-**TO**

Deduct $360 from list price for Trim only Pricing.

Roughs available: 100.92.046BT & 100.92.048BT (Page 81)

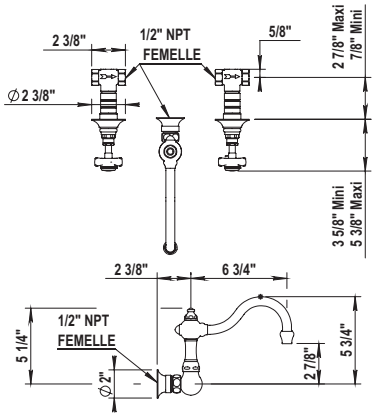

Single Hole Two Handle Basin Mixer

102.28.208

- Fixed Spout
- ¼-Turn Ceramic Disc
- Flow Rate: 2.2 GPM
- Pop up waste included

PC	$920
PN	$1045
BN	$1355
Group 1	$1390
Group 2	$1775

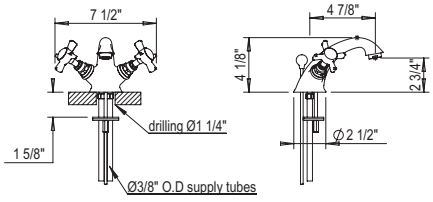

Single Hole Bidet Mixer

102.28.311

- Fixed Spout
- ¼-Turn Ceramic Disc
- 40º Rotating Aerator
- Flow Rate: 2.2 GPM
- Available
- Pop up waste included

PC	$895
PN	$995
BN	$1295
Group 1	$1415
Group 2	$1695

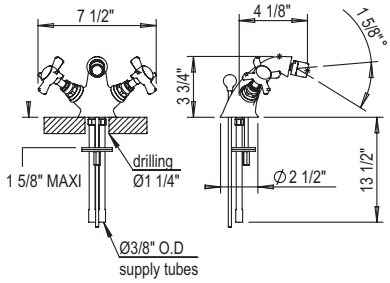

Exposed Wall Mounted Tub Filler with Handshower

ANTI-SCALE NOZZLES

102.28.434

- Fixed Spout
- ¼-Turn Ceramic Disc
- 59” Shower Hose
- Flow Rate: 11 GPM
- Vacuum Breaker Built Inside the Body
- All Metal Handle Available
- Anti-calcium Handshower

PC	$2170
PN	$2385
BN	$2495
Group 1	$2595
Group 2	$2795

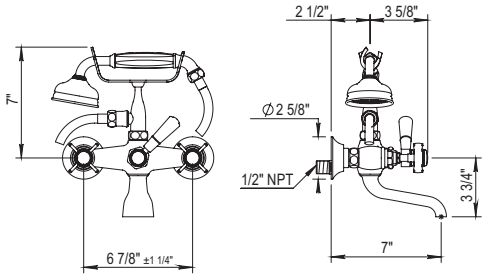

Exposed Deck Mounted Tub Filler with Handshower

ANTI-SCALE NOZZLES

102.28.435

- Fixed Spout
- ¼-Turn Ceramic Disc
- Excentrical Centers +/- ¾”
- Flow Rate: 11 GPM
- Vacuum Breaker Built Inside the Body
- All Metal Handle Available
- Anti-calcium Handshower

PC	$2425
PN	$2660
BN	$2830
Group 1	$2995
Group 2	$3195

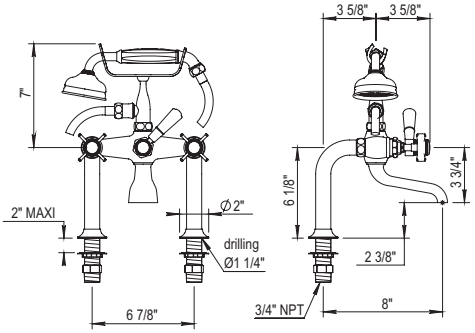

Five Hole Deck Tub Set

ANTI-SCALE NOZZLES

102.28.467

102.27.467

- ¼-Turn Ceramic Disc
- Fixed Spout with Deck Mounted Diverter
- Retractable handshower with 79” Hose
- Flow Rate: 15.9 GPM
- Anti-calcium Handshower

PC	$2430
PN	$2595
BN	$3260
Group 1	$3885
Group 2	$4980

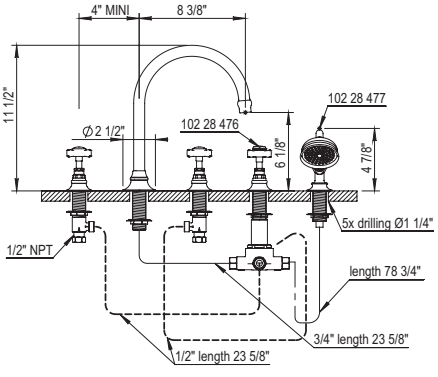

Accessories on page 89

Exposed Floor Mounted Tub Filler with Handshower

ANTI-SCALE NOZZLES

102.28.498

- Fixed Spout
- ¼-Turn Ceramic Disc
- 59” Shower Hose
- ¾’’ NPT Connections
- Flow Rate: 11 GPM
- Vacuum Breaker Built Inside the Body
- All Metal Handle Available
- Anti-calcium Handshower

PC	$3485
PN	$3725
BN	$4105
Group 1	$4350
Group 2	$5575

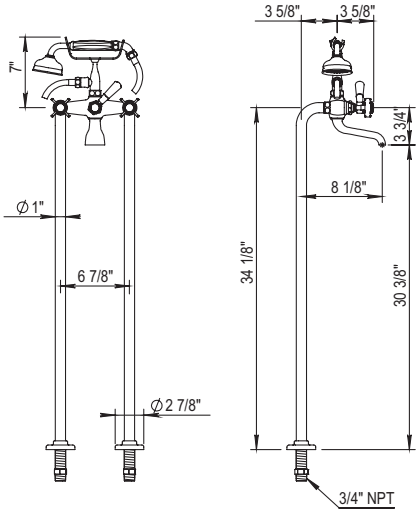

T-Connector for Floor Risers

100.00.499

- Drain Diameter: 1” min to 1 ½” max

Floor installed version on page 61

PC	$875
PN	$935
BN	$1035
Group 1	$1265
Group 2	$1620

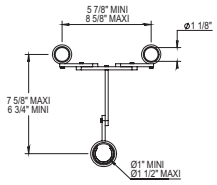

8’’ Tub Spout

102.28.471

- Solid Brass
- ¾” Female NPT

PC	$415
PN	$475
BN	$565
Group 1	$625
Group 2	$775

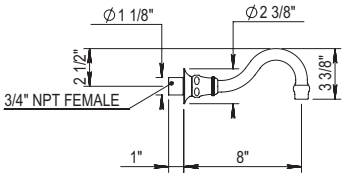

3/4'' Thermostatic Mixer- Trim Only

102.28.521
102.27.521

Solid Brass Trim Plate.
Integrated Service Stops
Requires mixing valve
100.92.591BT or
102.92.524BT.
See page 80 for details

	PC	$1010
	PN	$1160
	BN	$1425
	Group 1	$1525
	Group 2	$1880
100.92.591	**BT**	$595 ✓
or 102.92.524	**BT**	$2395

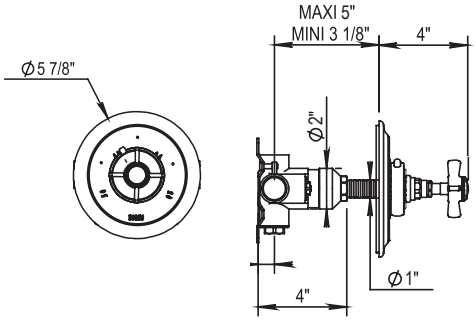

3/4'' Thermostatic Mixer- Trim Only

102.28.507

Solid Brass Trim Plate.
Integrated Service Stops

Requires mixing valve
100.92.591BT.
See page 80 for details

	PC	$1095
	PN	$1270
	BN	$1495
	Group 1	$1760
	Group 2	$2095
100.92.591	**BT**	$595 ✓

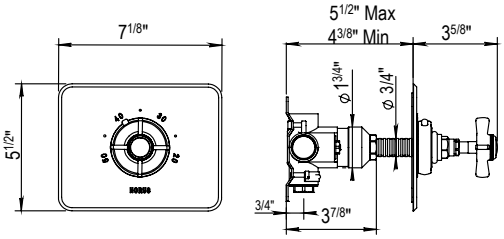

3/4'' Thermostatic Mixer- Trim Only

102.28.502
102.27.502

Solid Brass Trim Plate.
Integrated Service Stops
Single function 2-way
diverter. Safety stop at
37°C (99°F)

Requires mixing valve 100.92.593BT
See page 80 for details

	PC	$1345
	PN	$1555
	BN	$1960
	Group 1	$2250
	Group 2	$2595
100.92.593	**BT**	$1395 ✓

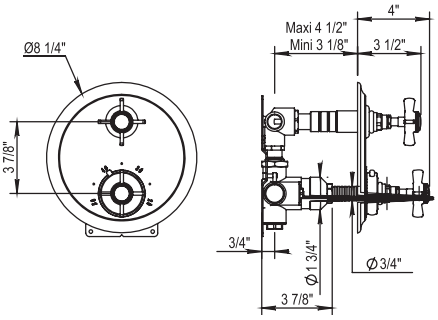

3/4'' Thermostatic Mixer- Trim Only

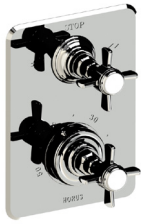

102.28.508
102.27.508

Solid Brass Trim Plate.
Single function 2-way
diverter. Safety stop at
37°C (99°F)

Requires mixing valve 100.92.593BT
See page 80 for details

	PC	$1455
	PN	$1680
	BN	$2045
	Group 1	$2295
	Group 2	$2715
100.92.593	**BT**	$1395✓

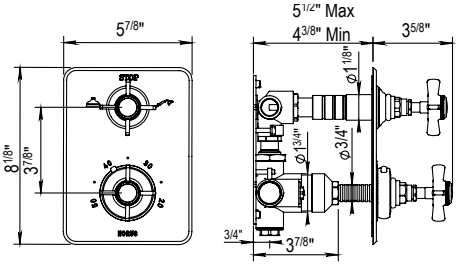

Accessories on page 89

3/4'' Thermostatic with Integrated Diverter - Trim Plate Only

102.28.529	**PC**	$1420
	PN	$1625
102.27.529	**BN**	$1990
	Group 1	$2275
	Group 2	$2635

- Single Function 3 Way Diverter
- Solid Brass
- Safety Stop @ 37 °C (99°F)

Requires mixing valve 100.92.599BT
See page 80 for details

100.92.599	**BT**	$1450 ✓

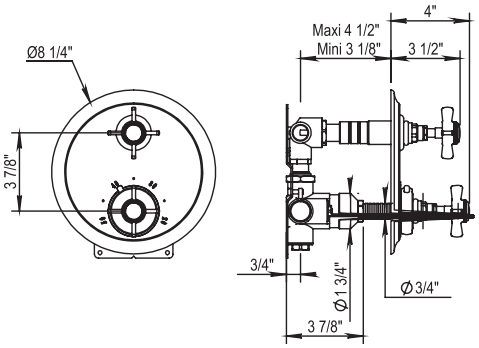

Volume Control- Trim Only

102.28.578	**PC**	$245
	PN	$270
102.27.578	**BN**	$330
	Group 1	$365
	Group 2	$470

- Trim for ½" or ¾" Volume Control Roughs
- Trim for in Wall Diverters

Requires one of the following mixing valves:
See page 81 for details

100.92.046	**BT**	$180 ✓
100.92.048	**BT**	$205
100.92.047	**BT**	$180 ✓
100.92.049	**BT**	$205
100.92.030	**BT**	$540
100.92.090	**BT**	$595

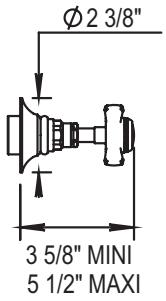

Vintage Handshower & Fixed Handshower Holder

100.01.589	**PC**	$865
	PN	$895
	BN	$990
	Group 1	$1290
	Group 2	$1655

- Wall Union
- 59'' Metal Hose
- Fixed Handshower Holder
- Flow Rate: 2.2 GPM
- All Metal Handle Available
- Anti-calcium Handshower

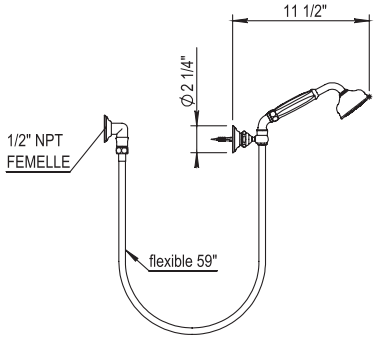

Vintage Handshower & Sliding Bar

100.01.532	**PC**	$1350
	PN	$1395
	BN	$1520
	Group 1	$2025
	Group 2	$2595

- Wall Union
- 59'' Metal Hose
- Swiveling Handshower Holder
- 23 5/8'' Sliding Wall Bar
- All Metal Handle Available
- Anti-calcium Handshower

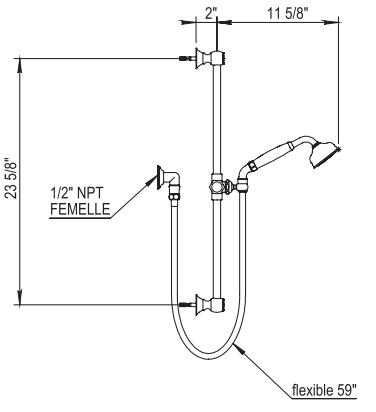

✓ **NOTE!** This check mark symbol indicates IN STOCK

Group 1: UB / AB / GAB / MC / GC **Group 2:** GB / CB / PG / MG

27 | 28 Dover Shower Kits

10” shower head with ceiling mounted arm, wall shower set, and 2 function thermostatic trim & rough

102.28.001
102.27.001

PC	$5350
PN	$5800
BN	$6620
Group 1	$7660
Group 2	$8975

Components Included

B006976	Showerhead
100.92.540	Ceiling Arm
100.01.532	Wallshower set
102.28.502	Thermostatic Trim
100.92.593BT	Thermostatic Rough

Rough and Trim Kits can be sold Seperately.

Rough-In:
100.92.593BT $1395

Trim Kit:
102.28.001-TR or
102.27.001-TR etc
Deduct $1395 from Full kit

6” shower head with angled wall mounted arm, wall shower set, thermostatic trim & rough and 2 shut offs.

102.28.002
102.27.002

PC	$5435
PN	$5840
BN	$6630
Group 1	$7795
Group 2	$9500

Components Included

100.92.945	6” Showerhead
100.92.960	Angled Wall arm
100.01.532	Wallshower set
102.28/27.521	Thermostatic Trim
100.92.591BT	Thermostatic Rough
2x 102.28/27.578	Volume Control Trim
2x 100.92.046BT	Volume Control Rough

Rough and Trim Kits can be sold Seperately.

Rough Kit:
102.00.002 $955

Trim Kit:
102.28.002-TR or
102.27.002-TR etc
Deduct $955 from Full kit

4⅛” shower head with angled wall mounted arm, wall shower set, thermostatic trim & rough and 2 shut offs.

102.28.003
102.27.003

PC	$4735
PN	$5095
BN	$5800
Group 1	$6685
Group 2	$8155

Components Included

100.92.435	4⅛” Showerhead
100.92.960	Angled Wall arm
100.01.589	Wallshower set
102.28/27.521	Thermostatic Trim
100.92.591BT	Thermostatic Rough
2x 102.28/27.578	Volume Control Trim
2x 100.92.046BT	Volume Control Rough

Rough and Trim Kits can be sold Seperately.

Rough Kit:
102.00.002 $955

Trim Kit:
102.28.003-TR or
102.27.003-TR etc
Deduct $955 from Full kit

Accessories on page 89

Eloise

02 Eloïse

3 Hole Basin Mixer

100.02.260

- Swivel Spout
- ¼-Turn Ceramic Disc
- Flow Rate: 2.2 GPM
- CalGreen Low Flow Aerator and Low Lead Available
- Pop up waste included

PC	$1220
PN	$1280
BN	$1380
Group 1	$1775
Group 2	$2270

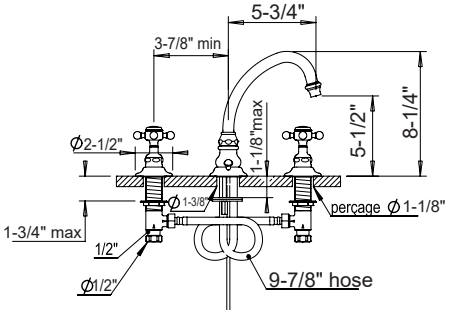

Single Lever Basin Mixer

100.02.708

- Swivel Spout
- ¼-Turn Ceramic Disc
- Flow Rate: 2.2 GPM
- CalGreen Low Flow Aerator and Low Lead Available
- All Metal Lever Handle Available
- Pop up waste included

PC	$1185
PN	$1245
BN	$1485
Group 1	$1895
Group 2	$2430

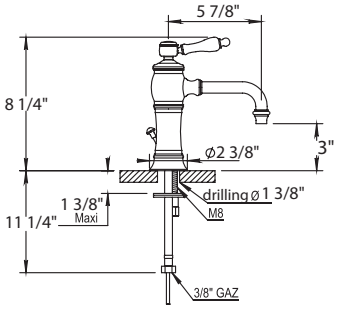

Single Lever Vessel Mixer

100.02.719

- Swivel Spout
- Ceramic Disc Cartridge
- Flow Rate: 2.2 GPM
- All Metal Lever Handle Available
- Pop up waste included

PC	$1495
PN	$1575
BN	$1700
Group 1	$2175
Group 2	$2785

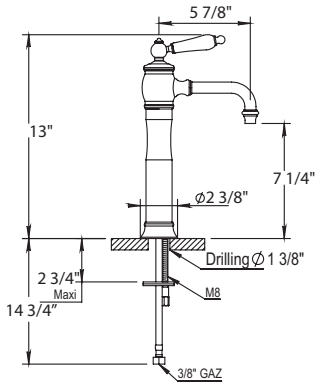

3 Hole Wall Mounted Basin Mixer

100.02.263

- Swivel Spout
- ¼-Turn Ceramic Disc
- Lift & Turn Drain Included
- Flow Rate: 2.2 GPM
- CalGreen Low Flow Aerator and Low Lead Available

PC	$1395
PN	$1465
BN	$1565
Group 1	$2025
Group 2	$2595

Trim Only available: i.e. 102.66.262PN-**TO**
Deduct $360 from list price for Trim only Pricing.

Roughs available:
100.92.046BT & 100.92.048BT (Page 81)

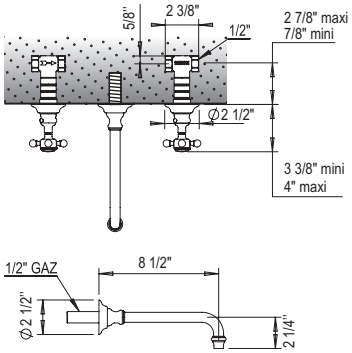

Accessories on page 85

Two Handle Basin Mixer

100.02.208

- Swivel Spout
- ¼-Turn Ceramic Disc
- Flow Rate: 2.2 GPM
- Pop up waste included

PC	$935
PN	$965
BN	$1050
Group 1	$1360
Group 2	$1740

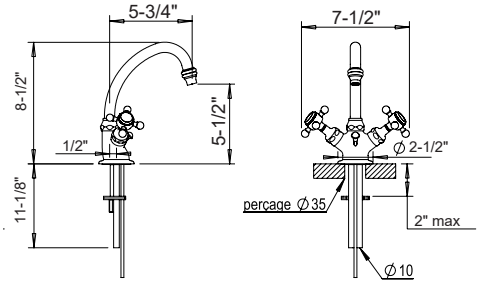

Single Hole Two Handle Bidet Mixer

100.02.311

- Swivel Spout
- ¼-Turn Ceramic Disc
- Flow Rate: 2.2 GPM
- CalGreen Low Flow Aerator and Low Lead Available
- All Metal Lever Handle Available
- Pop up waste included

PC	$995
PN	$1095
BN	$1195
Group 1	$1560
Group 2	$1895

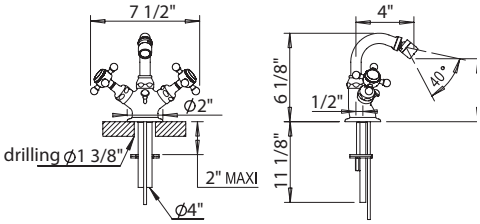

Exposed Wall Mounted Tub Filler with Handshower

100.02.414

- Fixed Spout
- ¼-Turn Ceramic Disc
- 59” Shower Hose
- Flow Rate: 11 GPM
- Vacuum Breaker Built Inside the Body
- All Metal Handle Available
- Anti-calcium Handshower

Lever Middle handle

PC	$2420
PN	$2535
BN	$2775
Group 1	$3510
Group 2	$4495

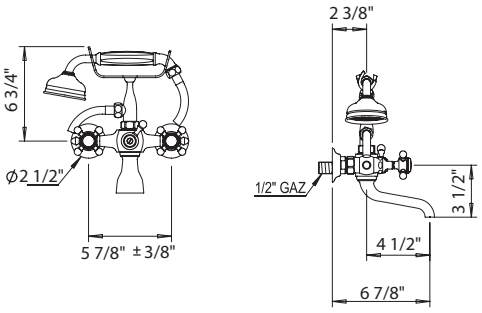

Exposed Deck Mounted Tub Filler with Handshower

100.02.485

- Fixed Spout
- ¼-Turn Ceramic Disc
- 59” Shower Hose
- Excentrical Centers ± 1”
- Flow Rate: 11 GPM
- Vacuum Breaker Built Inside the Body
- All Metal Handle Available
- Anti-calcium Handshower

Lever Middle handle

PC	$2795
PN	$2995
BN	$3250
Group 1	$4030
Group 2	$4895

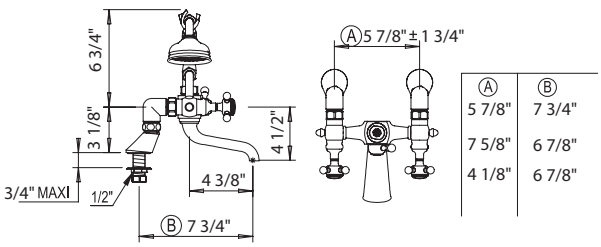

Exposed Floor Mounted Tub Filler with Handshower

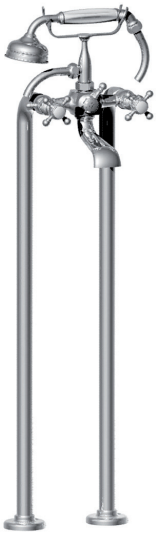

102.02.498

- Fixed Spout
- ¼-Turn Ceramic Disc
- 59” Shower Hose
- ¾’’ NPT Connections
- Flow Rate: 11 GPM
- Vacuum Breaker Built Inside the Body
- All Metal Handle Available
- Anti-calcium Handshower

ANTI-SCALE NOZZLES

PC	$3515
PN	$3680
BN	$3970
Group 1	$5095
Group 2	$6535

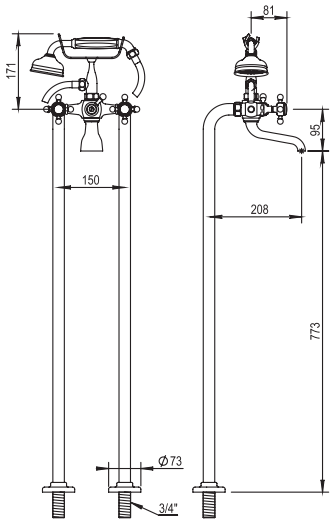

T-Connector for Floor Risers

100.00.499

- Drain Diameter: 1” min to 1 ½” max

Floor installed version on page 61

PC	$875
PN	$935
BN	$1035
Group 1	$1265
Group 2	$1620

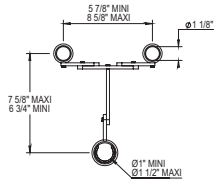

Exposed Thermostatic Shower with Handshower

100.02.544-10

- Two ¼-Turn Ceramic Disc Volume Control
- 10.6” Showerhead
- 60” Handshower Hose
- Includes Anti-calcium Handshower, Hose and Wall Hook
- Flow Rate: 9 GPM
- All Metal Handle Available
- Integrated Service Stops
- Can Come Plugged Under Second Volume Control With Hand Shower And Hose Separate Upon Request.
- Showerhead restrictor Available Upon request
- Option to change to 8’’ showerhead by ordering **100.06.544/100.10.544**
- Showerhead with 50° rotating ball joint

ANTI-SCALE NOZZLES

PC	$4375
PN	$4790
BN	$5135
Group 1	$6995
Group 2	$8695

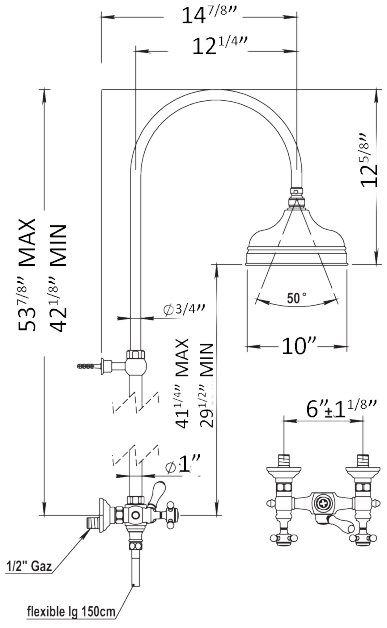

Accessories on page 85

3/4'' Thermostatic - Trim Plate Only

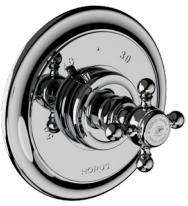

100.01.521

Solid Brass Trim Plate
With Service Stops

Requires mixing valve
100.92.591BT
See page 80 for details

PC	$1115
PN	$1150
BN	$1215
Group 1	$1620
Group 2	$2080

100.92.591 **BT** $595✓

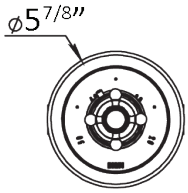

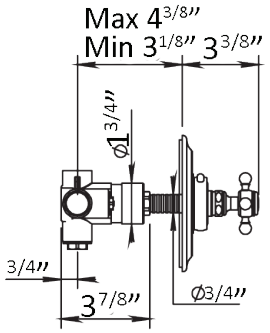

3/4'' Thermostatic - Trim Plate Only

100.01.507

Solid Brass Trim Plate
With Service Stops

Requires mixing valve
100.92.591BT
See page 80 for details

PC	$1160
PN	$1195
BN	$1265
Group 1	$1650
Group 2	$2115

100.92.591 **BT** $595 ✓

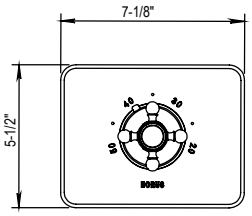

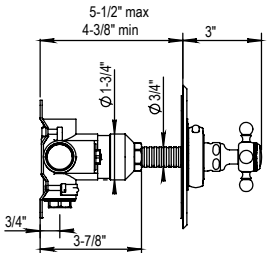

3/4'' Thermostatic with Integrated Diverter - Trim Plate Only

100.01.502

- Single Function 2 Way Diverter
- Solid Brass
- Safety Stop @ 37 °C (99°F)

Requires mixing valve 100.92.593BT
See page 80 for details

PC	$1455
PN	$1675
BN	$2035
Group 1	$2115
Group 2	$2705

100.92.593 **BT** $1395✓

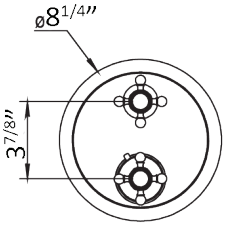

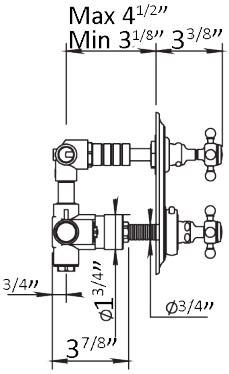

3/4'' Thermostatic with Integrated Diverter - Trim Plate Only

100.01.508

- Single Function 2 Way Diverter
- Solid Brass
- Safety Stop @ 37 °C (99°F)

Requires mixing valve 100.92.593BT
See page 80 for details

PC	$1515
PN	$1740
BN	$2120
Group 1	$2140
Group 2	$2745

100.92.593 **BT** $1395✓

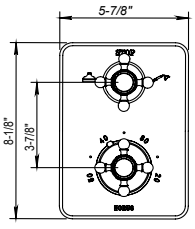

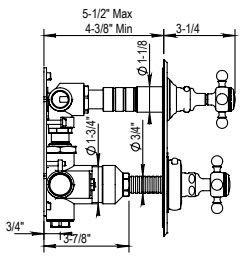

3/4'' Thermostatic with Integrated Diverter - Trim Plate Only

100.01.529

- Single Function 3 Way Diverter
- Solid Brass
- Safety Stop @ 37 °C (99°F)

PC	$1475
PN	$1690
BN	$2060
Group 1	$2275
Group 2	$2740

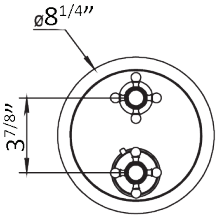

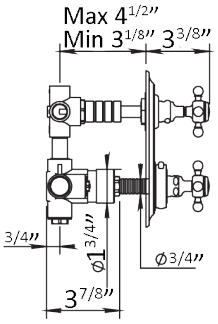

Requires mixing valve 100.92.599BT
See page 80 for details

100.92.599	**BT**	$1450 ✓

Volume Control- Trim Only

100.01.578

- Trim for ½" or ¾" Volume Control Roughs
- Trim for in Wall Diverters

PC	$310
PN	$330
BN	$365
Group 1	$480
Group 2	$580

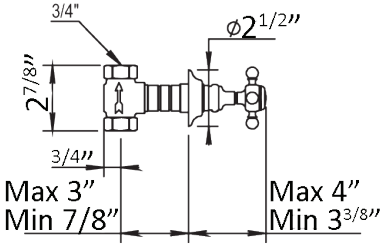

Requires one of the following mixing valves:
See page 81 for details

100.92.046	**BT**	$180 ✓	(1/2'' VC closing clockwise)
100.92.048	**BT**	$205	(1/2'' VC closing counter-clockwise)
100.92.047	**BT**	$180 ✓	(3/4'' VC closing clockwise)
100.92.049	**BT**	$205	(3/4'' VC closing counter-clockwise)
100.92.030	**BT**	$540	(1/2'' 2 function diverter)
100.92.090	**BT**	$595	(1/2'' 3 function diverter)

Vintage Handshower & Fixed Handshower Holder

ANTI-SCALE NOZZLES

100.01.589

- Wall Union
- 59'' Metal Hose
- Fixed Handshower Holder
- Flow Rate: 2.2 GPM
- All Metal Handle Available
- Anti-calcium Handshower

PC	$865
PN	$895
BN	$990
Group 1	$1290
Group 2	$1655

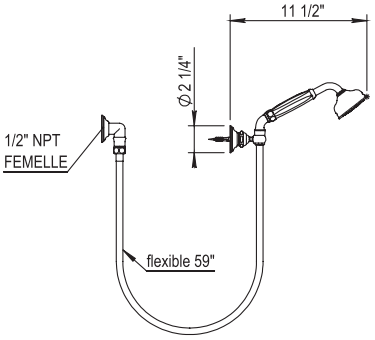

Vintage Handshower & Sliding Bar

ANTI-SCALE NOZZLES

100.01.532

- Wall Union
- 59'' Metal Hose
- Swiveling Handshower Holder
- 23 5/8'' Sliding Wall Bar
- All Metal Handle Available
- Anti-calcium Handshower

PC	$1350
PN	$1395
BN	$1520
Group 1	$2025
Group 2	$2595

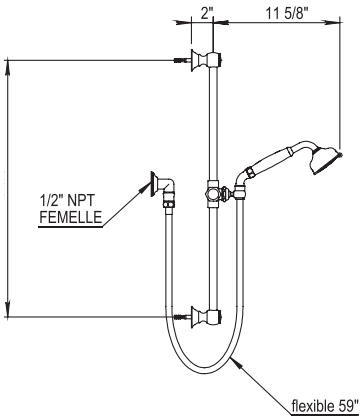

Accessories on page 85

Monroe

04 Monroe

3 Hole Basin Mixer

100.04.261

- Swivel Spout
- ¼-Turn Ceramic Disc
- Flow Rate: 2.2 GPM
- CalGreen Low Flow Aerator and Low Lead Available
- Pop up waste included

PC	$1275
PN	$1435
BN	$1735
Group 1	$1950
Group 2	$2375

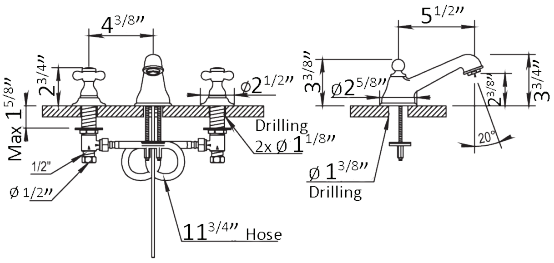

Basin Pillar Tap

100.04.231

- Fix Spout
- ¼-Turn Ceramic Disc
- No Aerator

PC	$315
PN	$385
BN	$420
Group 1	$460
Group 2	$590

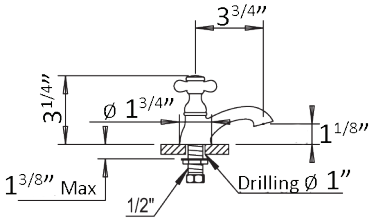

Exposed Wall Mounted Tub Filler with Handshower

100.04.434

- Fixed Spout
- ¼-Turn Ceramic Disc
- 59" Shower Hose
- Flow Rate: 11 GPM
- Vacuum Breaker Built Inside the Body
- All Metal Handle Available
- Anti-calcium Handshower

Lever Middle handle

PC	$2080
PN	$2195
BN	$2335
Group 1	$3095
Group 2	$3690

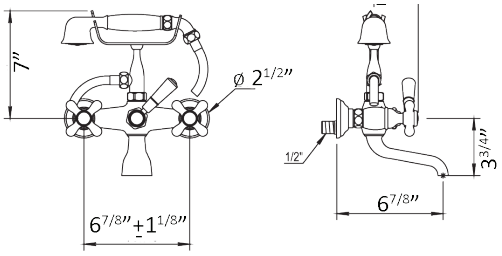

Exposed Deck Mounted Tub Filler with Handshower

100.04.435

- Fixed Spout
- ¼-Turn Ceramic Disc
- 59" Shower Hose
- Excentrical Centers ± 1"
- Flow Rate: 11 GPM
- Vacuum Breaker Built Inside the Body
- All Metal Handle Available
- Anti-calcium Handshower

Lever Middle handle

PC	$2535
PN	$2660
BN	$3295
Group 1	$3835
Group 2	$4915

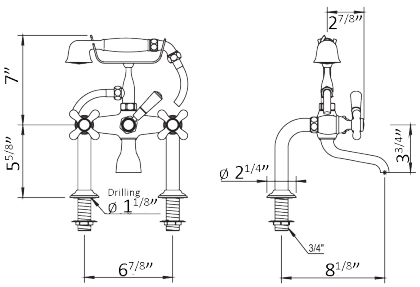

Exposed Floor Mounted Tub Filler with Handshower

ANTI-SCALE NOZZLES

100.04.498

- Fixed Spout
- ¼-Turn Ceramic Disc
- 59” Shower Hose
- ¾’’ NPT Connections
- Flow Rate: 11 GPM
- Vacuum Breaker Built Inside the Body
- All Metal Handle Available
- Anti-calcium Handshower

PC	$3440
PN	$3555
BN	$3780
Group 1	$5130
Group 2	$6575

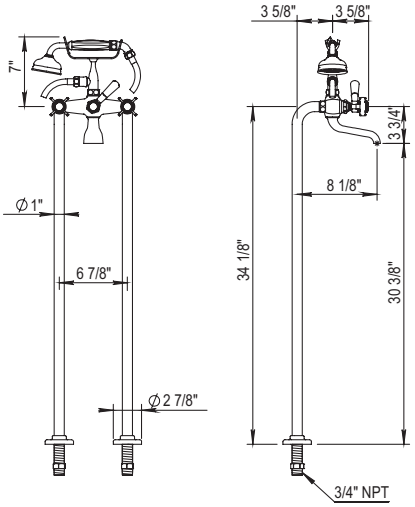

T-Connector for Floor Risers

100.00.499

- Drain Diameter: 1” min to 1 ½” max

PC	$875
PN	$935
BN	$1035
Group 1	$1265
Group 2	$1620

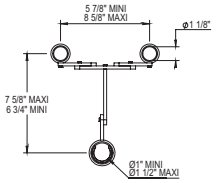

T-Connector for Floor Risers

100.00.495

PC	$1040
PN	$1065
BN	$1190
Group 1	$1555
Group 2	$1845

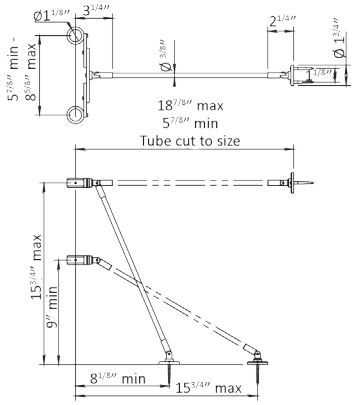

Fixing Set for Columns

100.00.496

PC	$725
PN	$765
BN	$825
Group 1	$1070
Group 2	$1370

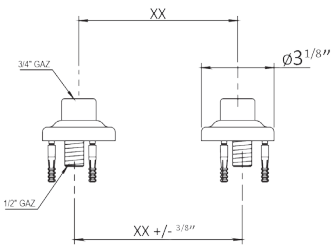

3/4'' Thermostatic - Trim Plate Only

100.04.521

Solid Brass Trim Plate
With Service Stops

Requires mixing valve
100.92.591BT
See page 80 for details

PC	$1070	
PN	$1235	
BN	$1505	
Group 1	$1565	
Group 2	$1995	

100.92.591 **BT** $595 ✓

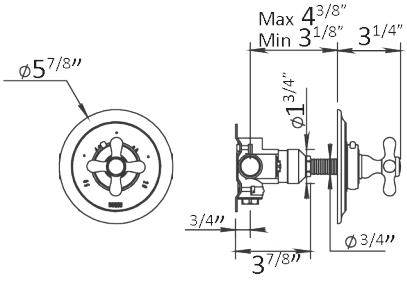

3/4'' Thermostatic - Trim Plate Only

100.04.507

Solid Brass Trim Plate
With Service Stops

Requires mixing valve
100.92.591BT
See page 80 for details

PC	$1120	
PN	$1285	
BN	$1525	
Group 1	$1580	
Group 2	$1995	

100.92.591 **BT** $595 ✓

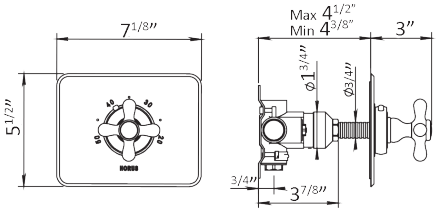

3/4'' Thermostatic with Integrated Diverter - Trim Plate Only

100.04.502

- Single Function 2 Way Diverter
- Solid Brass
- Safety Stop @ 37 °C (99°F)

PC	$1410
PN	$1630
BN	$1930
Group 1	$2150
Group 2	$2625

Requires mixing valve 100.92.593BT
See page 80 for details

100.92.593 **BT** $1395✓

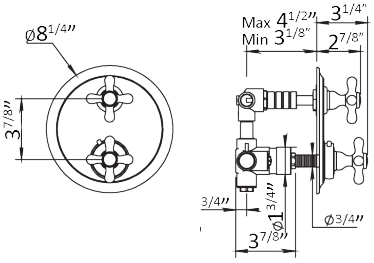

3/4'' Thermostatic with Integrated Diverter - Trim Plate Only

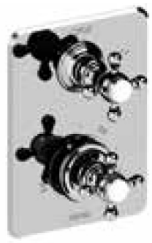

100.04.508

- Single Function 2 Way Diverter
- Solid Brass
- Safety Stop @ 37 °C (99°F)

PC	$1495
PN	$1690
BN	$1895
Group 1	$2335
Group 2	$2775

Requires mixing valve 100.92.593BT
See page 80 for details

100.92.593 **BT** $1395 ✓

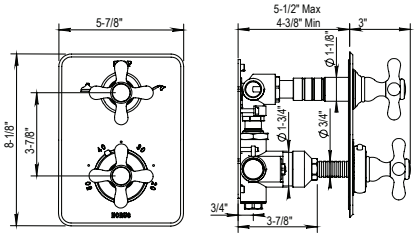

3/4'' Thermostatic with Integrated Diverter - Trim Plate Only

100.04.529

PC	$1430
PN	$1640
BN	$2000
Group 1	$2175
Group 2	$2660

- Single Function 3 Way Diverter
- Solid Brass
- Safety Stop @ 37 °C (99°F)

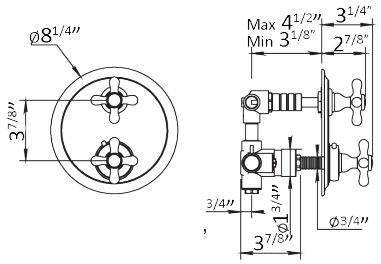

Requires mixing valve 100.92.599BT
See page 80 for details

100.92.599	**BT**	$1450 ✓

Volume Control- Trim Only

100.04.578

PC	$270
PN	$290
BN	$315
Group 1	$400
Group 2	$510

- Trim for ½" or ¾" Volume Control Roughs
- Trim for in Wall Diverters

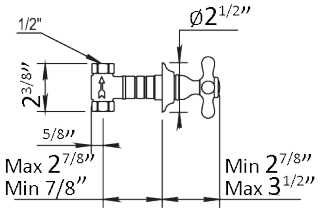

Requires one of the following mixing valves:
See page 81 for details

100.92.046	**BT**	$180 ✓	(1/2'' VC closing clockwise)
100.92.048	**BT**	$205	(1/2'' VC closing counter-clockwise)
100.92.047	**BT**	$180 ✓	(3/4'' VC closing clockwise)
100.92.049	**BT**	$205	(3/4'' VC closing counter-clockwise)
100.92.030	**BT**	$540	(1/2'' 2 function diverter)
100.92.090	**BT**	$595	(1/2'' 3 function diverter)

Vintage Handshower & Fixed Handshower Holder

100.01.589

PC	$865
PN	$895
BN	$990
Group 1	$1290
Group 2	$1655

- Wall Union
- 59'' Metal Hose
- Fixed Handshower Holder
- Flow Rate: 2.2 GPM
- All Metal Handle Available
- Anti-calcium Handshower

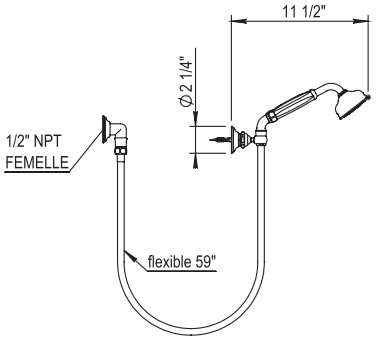

Vintage Handshower & Sliding Bar

100.01.532

PC	$1350
PN	$1395
BN	$1520
Group 1	$2025
Group 2	$2595

- Wall Union
- 59'' Metal Hose
- Swiveling Handshower Holder
- 23 5/8'' Sliding Wall Bar
- All Metal Handle Available
- Anti-calcium Handshower

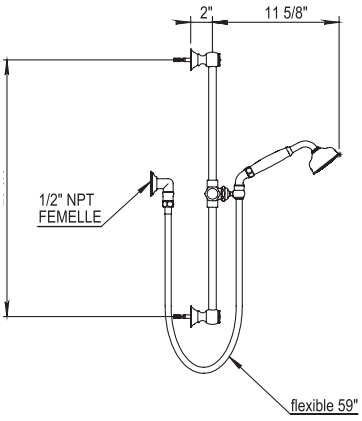

CONTEMPORARY COLLECTION

MYRIAD

BY STUDIO MHNA.

MYRIAD is the first collection of bathroom fittings to have combined traditional craftsmanship with Needle Engraving, an ornamentation composed of straight and wavy lines that intertwine or cross symmetrically. The result is a checkered pattern.

Collection designed in collaboration with Marc Hertrich's and Nicolas Adnet's MHNA studio.

STANDARD FINISHES

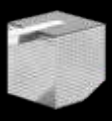

PC
Chrome

BC
Black Chrome

PG
Polished Gold

Living Finish

55 Myriad

PC Chrome Chrome | BC Black Chrome Chrome Noir | PG Polished Gold Doré Brillant

Single Hole Basin Mixer with pop-up

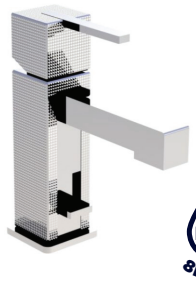

100.55.708

PC	$1485
BC	$1665
PG	$2495

- Fixed Spout
- ¼-Turn Ceramic Disc
- Flow Rate: 2.2 GPM
- Includes Pop Up Drain
- Water Saver at half way point

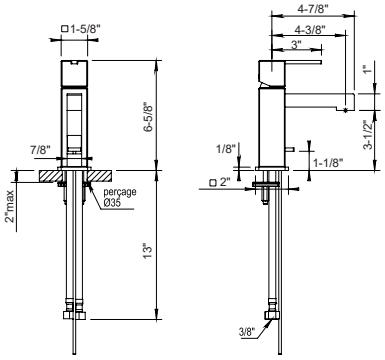

Single Hole Basin Mixer

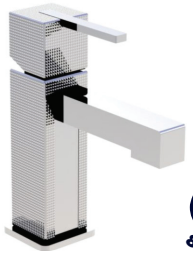

100.55.709

PC	$1485
BC	$1665
PG	$2795

- Fixed Spout
- ¼-Turn Ceramic Disc
- Flow Rate: 2.2 GPM
- Without Pop Up Drain
- Water Saver at half way point

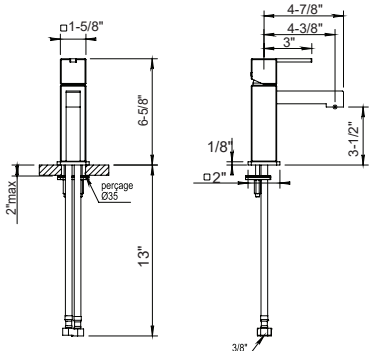

3 Hole Basin Mixer

100.55.260

PC	$2490
BC	$2725
PG	$4195

- Fixed Spout
- ¼-Turn Ceramic Disc
- Flow Rate: 2.2 GPM
- CalGreen Low Flow Aerator Available upon request
- Pop up waste included

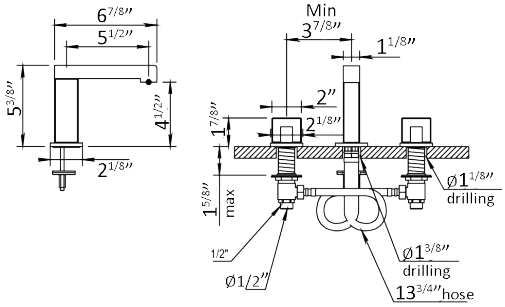

4 Hole Deck Tub & Shower Set

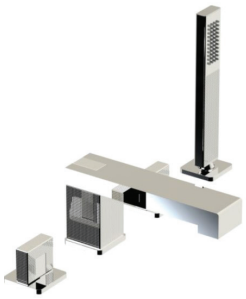

100.55.466

PC	$2970
BC	$3595
PG	$5150

- Fixed Spout with Integrated Diverter
- ¼-Turn Ceramic Disc
- Flow Rate: 14 GPM
- Retractable Handshower with 79'' Hose

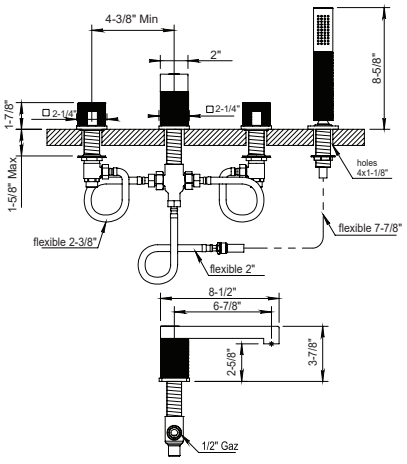

55 Myriad

PC Chrome Chrome

BC Black Chrome Chrome Noir

PG Polished Gold Doré Brillant

Exposed Floor Mount Tub Filler with Handshower

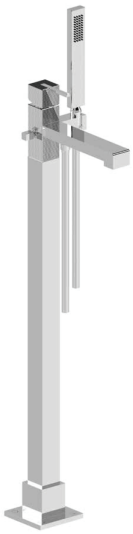

100.55.798

PC	$4895
BC	$6350
PG	$8220

- Fixed Spout with Integrated Diverter
- ¼-Turn Ceramic Disc
- Flow Rate: 11 GPM
- 59’’ Hose
- Anti-calcium Handshower

ANTI-SCALE NOZZLES

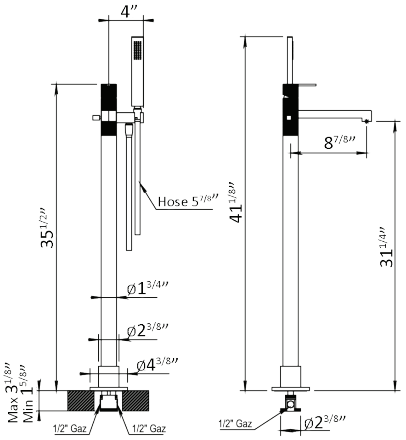

Exposed Floor Mount Tub Filler with Handshower

100.55.796

PC	$4475
BC	$4995
PG	$7500

- Single function 2 way diverter with built in volume control
- 10” Showerhead
- 60” handshower hose
- 2.5GPM @ 45PSI
- Showerhead restrictor available upon request
- Anti-Calcium handshower and shower head
- Stainless Steel Showerhead 14 L/min
- Showerhead with 50° rotating ball joint

ANTI-SCALE NOZZLES

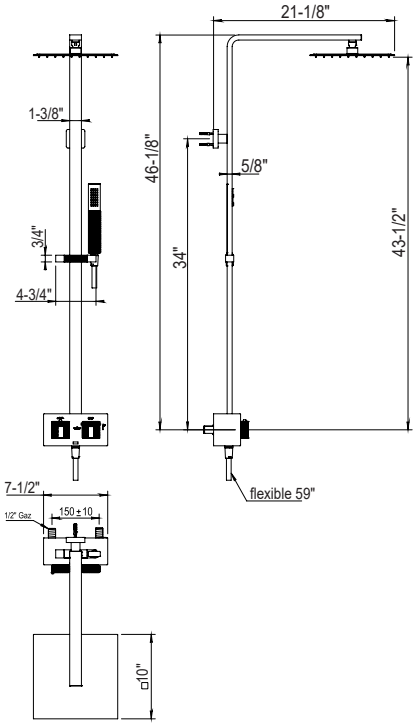

✓ **NOTE!** This check mark symbol indicates IN STOCK

55 Myriad

PC Chrome Chrome | BC Black Chrome Chrome Noir | PG Polished Gold Doré Brillant

3/4'' Thermostatic Trim

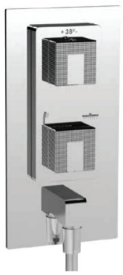

100.55.504

PC	$2065
BC	$2310
PG	$3460

- Single function 2 way diverter **with built in volume control**
- Trim Plate for 100.55.598
- Solid Brass
- 2-way diverter Safety Stop @ 38 °C (100.4 °F)
- Elbow outlet included
- Must use 100.55.582 or 100.55.542 handshower
- **Rough-in Required:** 100.55.598

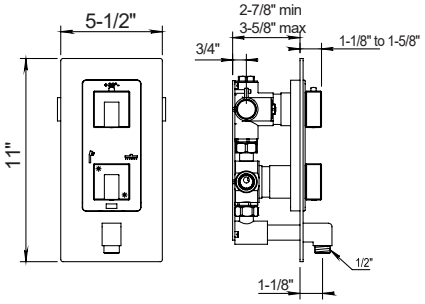

3/4'' Thermostatic Rough-In

100.55.598

BT	$1495 ✓

- 3/4'' NPT inlets
- 2x 1/2'' NPT Outlets
- Flow Rate: 22 L/min at 3 bars
- Diverter
- 1 outlet plug supplied

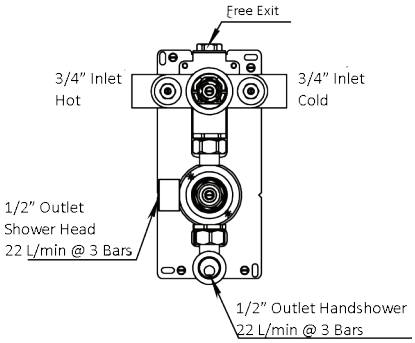

Handshower and Sliding Wall Bar Set

100.55.542

PC	$760
BC	$785
PG	$1295

- 23 ⅝'' Sliding wall bar
- 59'' Metal Hose
- Swiveling Handshower holder
- Anti-Calcium handshower
- All Metal Handle
- Outlet not included
- Use with 100.55.504

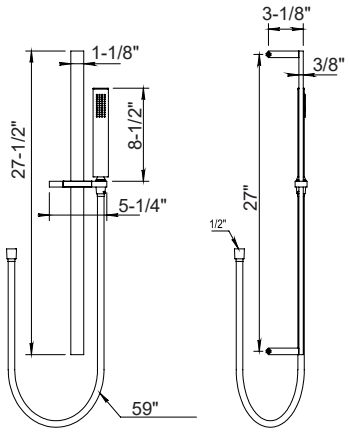

3/4'' Thermostatic Trim

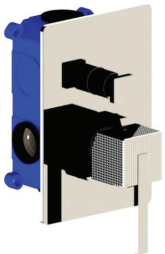

100.55.701

PC	$1200
BC	$1395
PG	$2045

- Wall mounted mixing valve
- Solid Brass
- 1 outlet
- Flow Rate: 22L/min at 3 bars

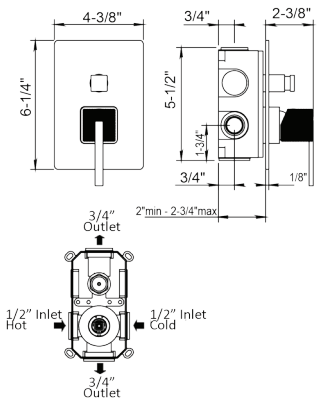

55 Myriad

PC Chrome
Chrome

BC Black Chrome
Chrome Noir

PG Polished Gold
Doré Brillant

Handshower and Hose Set

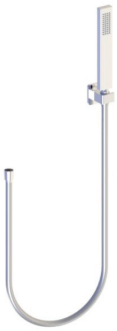

100.55.582

PC	$495
BC	$515
PG	$850

- 59'' Metal Hose
- Swiveling Handshower Holder
- Outlet not included
- Use with 100.55.504

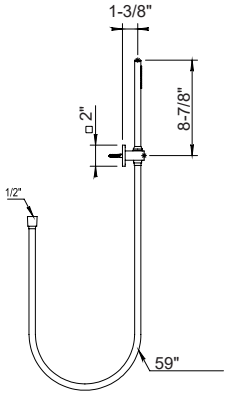

Handshower and Sliding Wall Bar Set with outlet

100.55.532

PC	$995
BC	$1385
PG	$2050

- 23 ⅝'' Sliding wall bar
- 59'' Metal Hose
- Swiveling Handshower holder
- Anti-Calcium handshower
- All Metal Handle
- Outlet included

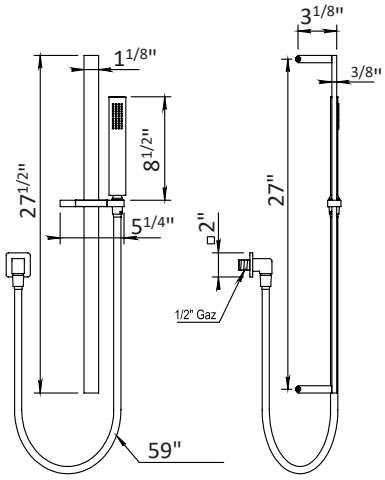

Showerhead and Arm

100.55.536

PC	$900

- 10'' Stainless Steel Shower Head with Anti-scale nozzles
- 1/2'' NPT Connection
- Flow Rate: 12L/min
- Showerhead Restrictor available upon request
- 50° rotating ball joint

ANTI-SCALE NOZZLES

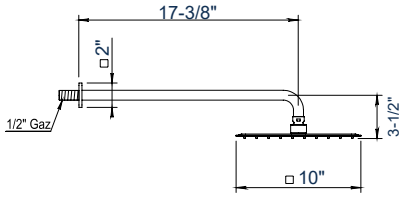

Showerhead and Arm

100.55.537

PC	$1215
BC	$1360
PG	$2045

- 10'' Stainless Steel Shower Head with Anti-scale nozzles
- 1/2'' NPT Connection
- Flow Rate: 14L/min
- Showerhead Restrictor available upon request
- 50° rotating ball joint

ANTI-SCALE NOZZLES

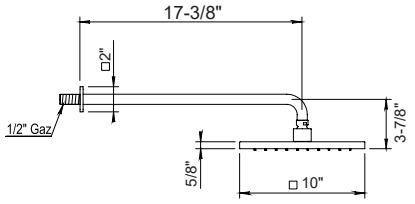

✓ **NOTE!** This check mark symbol indicates IN STOCK

55 Myriad

PC Chrome Chrome
BC Black Chrome Chrome Noir
PG Polished Gold Doré Brillant

Showerhead and Arm

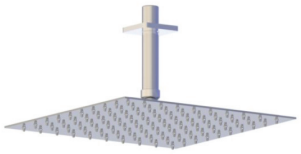

100.55.540 **PC** $695

- 10’’ Stainless Steel Shower Head with Anti-scale nozzles
- 1/2’’ NPT Connection
- Flow Rate: 12L/min
- Showerhead Restrictor available upon request
- 50° rotating ball joint

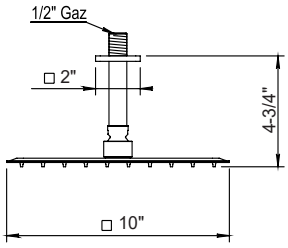

Showerhead and Arm

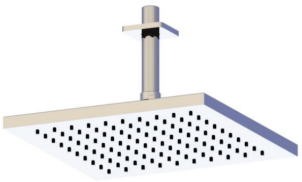

100.55.538

PC $950
BC $1095
PG $1695

- 10’’ Stainless Steel Shower Head with Anti-scale nozzles
- 1/2’’ NPT Connection
- Flow Rate: 14L/min
- Showerhead Restrictor available upon request
- 50° rotating ball joint

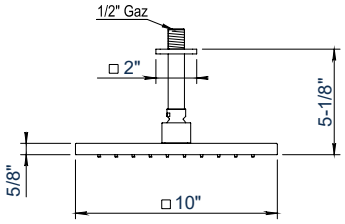

55 Myriad Shower Kits

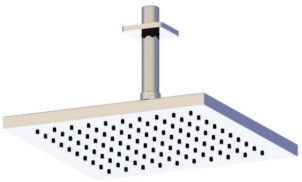

10” shower head with ceiling mounted arm, wall shower set, and 2 function thermostatic trim & rough

100.55.001

PC $5005
BC $5415
PG $7500

Components Included

100.55.598	Thermostatic Rough in
100.55.504	Thermostatic Trim
100.55.538	Showerhead & Ceiling Arm
100.55.582	Handshower & Hose set

55 Myriad

PC Chrome Chrome

BC Black Chrome Chrome Noir

PG Polished Gold Doré Brillant

10” shower head with wall mounted arm, sliding bar wall set, and 2 function thermostatic rough & trim.

100.55.002

PC	$5535
BC	$5950
PG	$8295

Components Included

100.55.598	Thermostatic Rough in
100.55.504	Thermostatic Trim
100.55.542	Handshower & Sliding Wall bar set
100.55.537	Showerhead & Wall Arm

Wall Tumbler Set

100.55.604

PC	$450
BC	$485
PG	$750

- Solid Brass
- Porcelain Tumbler
- Mounting Hardware Included

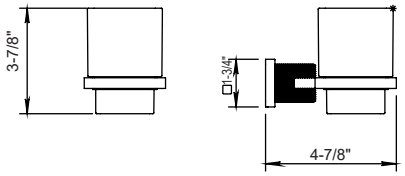

Wall Soap Dish

100.55.605

PC	$390
BC	$435
PG	$690

- Solid Brass
- Porcelain Soap Dish
- Mounting Hardware Included

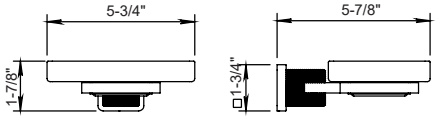

Towel Ring

100.55.609

PC	$460
BC	$500
PG	$770

- Solid Brass
- Mounting Hardware Included

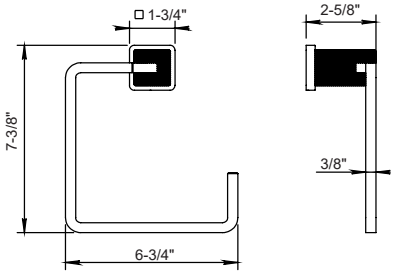

✓ **NOTE!** This check mark symbol indicates IN STOCK

55 Myriad

PC Chrome Chrome
BC Black Chrome Chrome Noir
PG Polished Gold Doré Brillant

Robe Hook

100.55.613

- Solid Brass
- Mounting Hardware Included

PC	$290
BC	$330
PG	$495

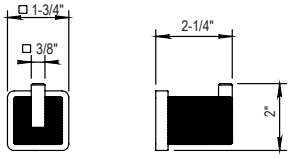

12'' Towel Rail

100.55.610

- Solid Brass
- Mounting Hardware Included

PC	$670
BC	$755
PG	$1130

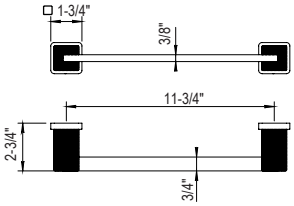

24'' Towel Rail

100.55.611

- Solid Brass
- Mounting Hardware Included

PC	$755
BC	$845
PG	$1260

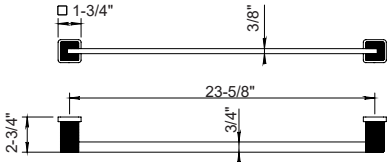

Toilet Roll Holder

100.55.617

- Solid Brass
- Mounting Hardware Included

PC	$410
BC	$460
PG	$690

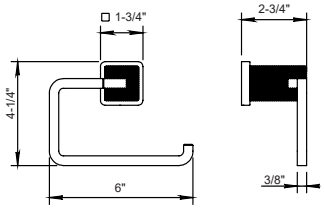

Spare Toilet Roll Holder

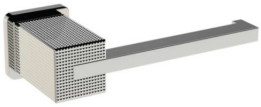

100.55.618

- Solid Brass
- Mounting Hardware Included

PC	$425
BC	$475
PG	$715

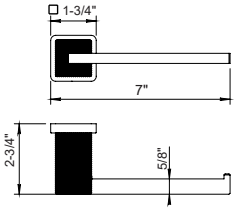

Toilet Brush Set

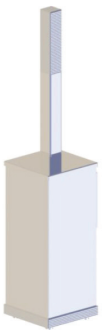

100.55.619

- Solid Brass
- Mounting Hardware Included

PC	$895
BC	$995
PG	$1500

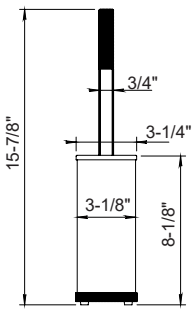

CONTEMPORARY COLLECTION

NEW WAVE

"PART OF A LARGE OCEAN, BUT REMAINS A SINGLE DROP OF WATER"

One of our company's truly iconic original design.

Nouvelle Vague has become a timeless collection thanks to its refined and resolutely contemporary line.

PC
Chrome

NC
Black Chrome

SPECIAL FINISHES

SC
Satin Copper

SG
Satin Gold

GM
Gun Metal

SN
Satin Nickel

PVD FINISHES

CHPVD
Champagne

PIPVD
Pink

BLPVD
Glossy Black

3 Hole Basin Mixer

100.40.260

- Fixed Spout
- ¼-Turn Ceramic Disc
- Flow Rate: 2.2 GPM
- Pop up waste included

PC	$1655
NC	$1915
SC	$2795
SG	$2795
GM	$2795
SN	$2795
CHPVD	$2795
PIPVD	$2795
BLPVD	$2795

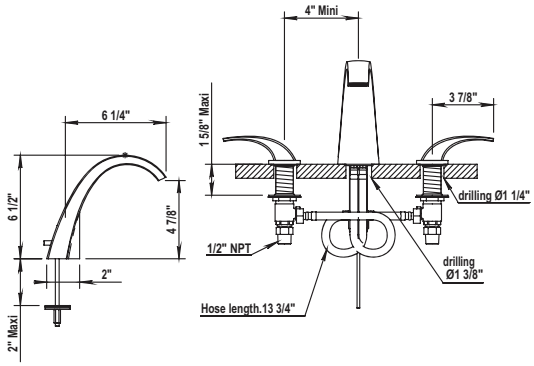

Single Lever Basin Mixer with Pop-up

100.40.708

- Fixed Spout
- Flex Hoses
- Ceramic Disc Cartridge
- Flow Rate: 2.2 GPM
- Pop up waste included

PC	$1195
NC	$1375
SC	$1945
SG	$1945
GM	$1945
SN	$1945
CHPVD	$1945
PIPVD	$1945
BLPVD	$1945

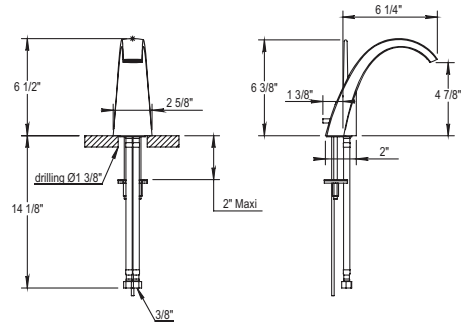

Exposed Thermostatic Shower with Handshower

100.40.550

- 10'' Showerhead
- 60'' Handshower Hose
- 50° rotating ball joint
- Integrated Fixed Handshower Hook
- 1/4 turn ceramic cartridge
- Anti-Calcium Handshower and Showerhead
- Showerhead Restrictor available upon request

ANTI-SCALE NOZZLES

PC	$6400
NC	$7555

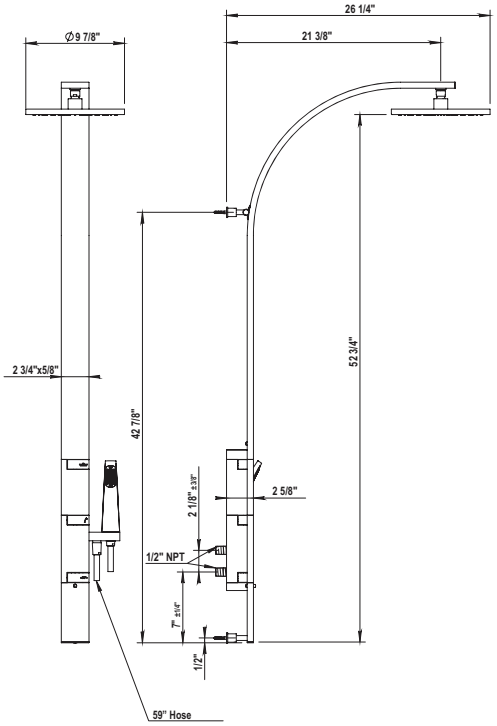

Cascading Tub Spout

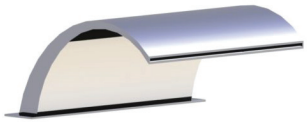

100.40.470

- Waterfall Deck Mounted Bath Spout width 11¼''
- 2 Inlet Supply 1/2''
- Solid Brass
- Flow Rate: 9 GPM

PC	$2995
SC	$5115
SG	$5115
GM	$5115
SN	$5115
CHPVD	$5115
PIPVD	$5115
BLPVD	$5115

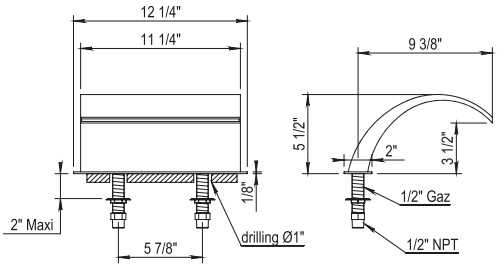

Cascading Tub Spout

100.40.760

- 3 Hole Deck Mounted Bath Mixer
- Waterfall Deck Mounted Bath Spout width 11¼''
- Solid Brass
- Flow Rate: 7 GPM

PC	$3995
SC	$6995
SG	$6995
GM	$6995
SN	$6995
CHPVD	$6995
PIPVD	$6995
BLPVD	$6995

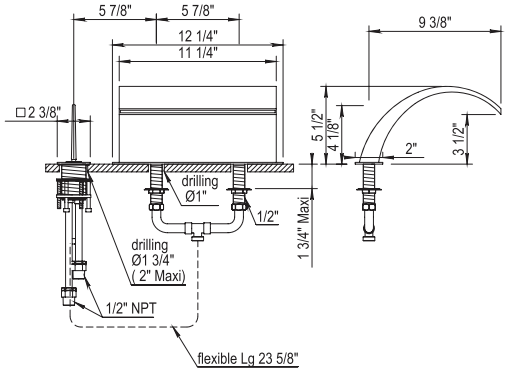

Cascading Tub Spout

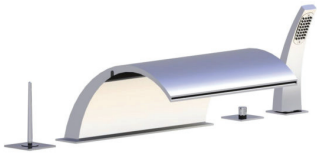

100.40.767

- 5 Hole Deck Mounted Bath Mixer
- Diverter for Hand shower and Spout
- Waterfall Deck Mounted Bath Spout width 11¼''
- Solid Brass
- Flow Rate: 7 GPM
- 79'' Metal Hose
- Anti-calcium handshower

ANTI-SCALE NOZZLES

PC	$5430
SC	$9670
SG	$9670
GM	$9670
SN	$9670
CHPVD	$9670
PIPVD	$9670
BLPVD	$9670

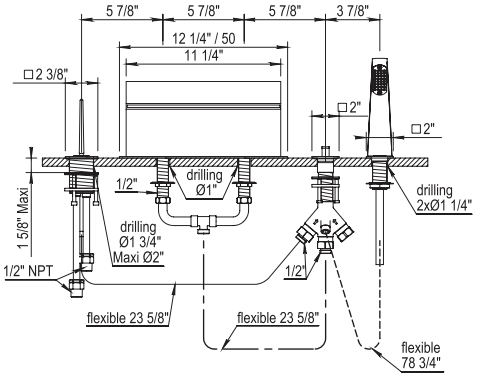

Wall Mounted Tub filler with Handshower

100.40.714

- Ceramic Disc Cartridge
- Includes Fixed Handshower hook and 60'' hose
- Flow Rate: 5.8 GPM
- Anti-calcium handshower

ANTI-SCALE NOZZLES

PC	$3060
NC	$3495
SC	$5200
SG	$5200
GM	$5200
SN	$5200
CHPVD	$5200
PIPVD	$5200
BLPVD	$5200

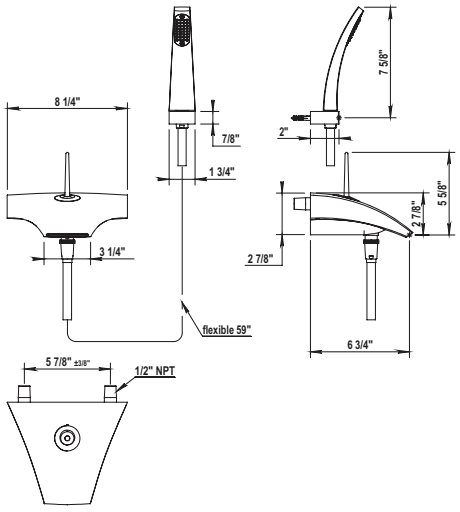

2 Hole Single Lever Deck Mounted Tubfiller with Handshower

ANTI-SCALE NOZZLES

100.40.766

- Fixed Spout
- Ceramic Disc Cartridge
- Integrated Diverter
- Flow Rate: 4.5 GPM
- Anti-Calcium Handshower

PC	$2590
NC	$2955
SC	$4215
SG	$4215
GM	$4215
SN	$4215
CHPVD	$4215
PIPVD	$4215
BLPVD	$4215

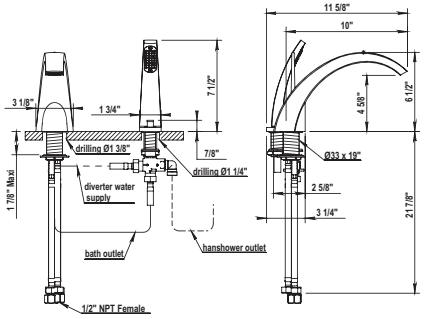

7'' Tub Spout

100.40.471

- Solid Brass
- 3/4'' NPT Female
- Flow Rate: 5.8 GPM

PC	$665
SC	$1135
SG	$1135
GM	$1135
SN	$1135
CHPVD	$1135
PIPVD	$1135
BLPVD	$1135

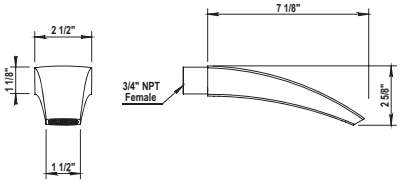

Cascading Tub Spout

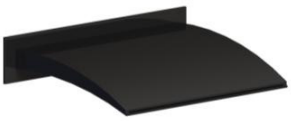

100.40.472

- Solid Brass
- Flow Rate: 6.6 GPM

PC	$2050
NC	$2495
SC	$3765
SG	$3765
GM	$3765
SN	$3765
CHPVD	$3765
PIPVD	$3765
BLPVD	$3765

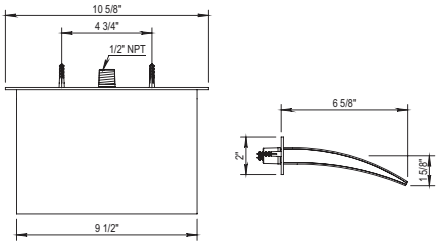

Complete Thermostatic Mixing Valve with Diverter

100.40.580

- Trim & Rough included
- 2x 3/4'' NPT Inlets
- 2x 3/4'' NPT Outlets
- Safety Stop @ 37°C (99°F)
- 1 Outlet Plug Supplied
- Single Function 2 way Integrated Diverter
- Integrated Service Stops
- Flow Rate: 14 GPM

PC	$2850
NC	$3495
SC	$4995
SG	$4995
GM	$4995
SN	$4995
CHPVD	$4995
PIPVD	$4995
BLPVD	$4995

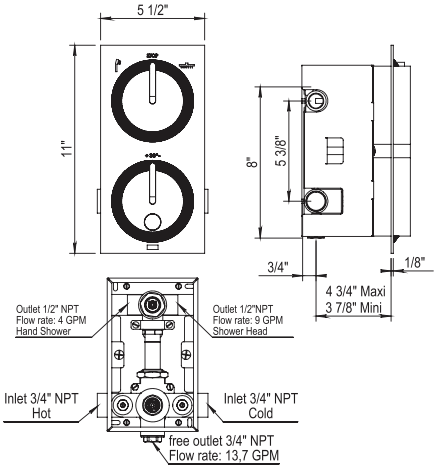

40 New Wave- Special Order

Handshower and Fixed Handshower Holder

ANTI-SCALE NOZZLES

100.40.590

- Wall Union
- 59'' Metal Hose
- Fixed Handshower holder
- Anti-Calcium Handshower

PC	$950
NC	$1115
SC	$1635
SG	$1635
GM	$1635
SN	$1635
CHPVD	$1635
PIPVD	$1635
BLPVD	$1635

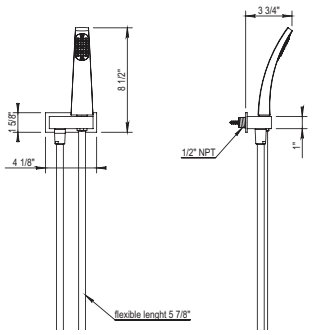

Handshower and Sliding Wall Bar Set

ANTI-SCALE NOZZLES

100.40.532

- 30'' Sliding Wall bar
- 59'' Metal Hose
- Fixed Handshower holder
- Anti-Calcium Handshower

PC	$1160
SC	$1995
SG	$1995
GM	$1995
SN	$1995
CHPVD	$1995
PIPVD	$1995
BLPVD	$1995

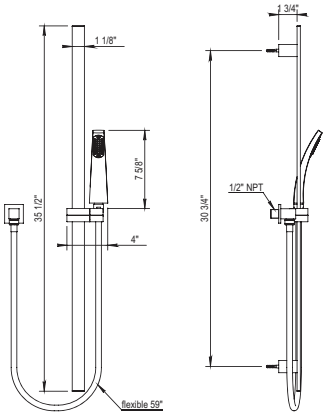

Shower

Thermostatic Rough-Ins

3/4'' Thermostatic Rough-In with Service Stops

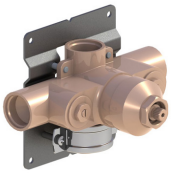

100.92.591 **BT** $595 ✓

- 3/4'' NPT Inlets
- 3/4'' NPT Outlets
- Safety Stop @ 37° C
- 14 GPM @ 14 PSI
- 1 Outlet Plug Supplied
- Integrated Service Stops
- Cartridge: HOPB00.6077BT. If manufacturered prior to 2017: HOP6312BT

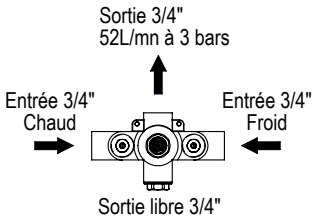

3/4'' Thermostatic Rough-In with Integrated Diverter

100.92.593 **BT** $1395 ✓

- 3/4'' NPT Inlets
- 3/4'' NPT Outlets
- Safety Stop @ 37° C (99° F)
- 14 GPM @ 14 PSI
- 1 Outlet Plug Supplied
- Single Function 2-way Diverter
- Integrated Service Stops
- Cartridge: HOP6312BT

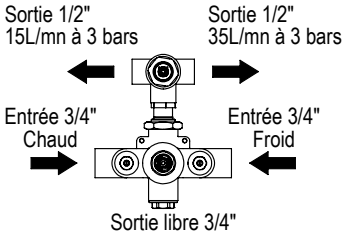

3/4'' Thermostatic Rough-In with Integrated Diverter

100.92.599 **BT** $1450 ✓

- 3/4'' NPT Inlets
- 3/4'' NPT Outlets
- Safety Stop @ 37° C (99° F)
- 14 GPM @ 14 PSI
- 1 Outlet Plug Supplied
- Single Function 3-way Diverter
- Integrated Service Stops
- Cartridge: HOPB00.6077BT. If manufacturered prior to 2017: HOP6312BT

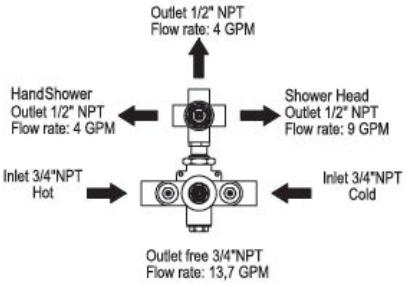

3/4'' Thermostatic Rough-In

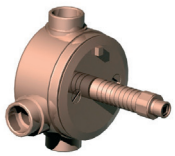

100.92.524 **BT** $2395

- 3/4'' NPT Inlets
- 3/4'' NPT Outlets
- Safety Stop @ 37° C (99° F)
- 20 GPM @ 14 PSI
- 1 Outlet Plug Supplied
- No Service Stops
- Cartridge: HOP92.999BT

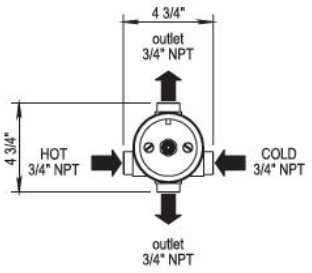

3/4'' Thermostatic Rough-In

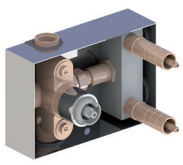

100.92.597 **BT** $1595 ✓

- 3/4'' NPT Inlets
- 2x 1/2'' NPT Outlets
- 14 GPM @ 45 PSI
- 1 Outlet Plug Supplied
- Integrated Service Stops for each outlet
- Cartridge: HOP6312BT

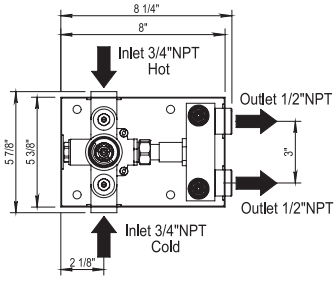

Volume Control Rough-Ins

1/2'' Volume Control Rough - Closing Clockwise

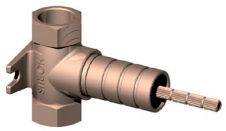

100.92.046 **BT** $180 ✓

- Unfinished Brass
- 1/4-Turn Ceramic Disk
- 12 GPM @ 45 PSI
- Separate Trim Required
- Cartridge: HOP92.026BT

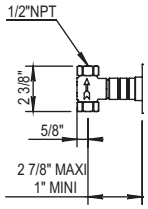

1/2'' Volume Control Rough - Closing CounterClockwise

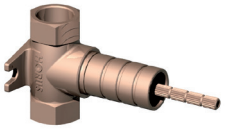

100.92.048 **BT** $180

- Unfinished Brass
- 1/4-Turn Ceramic Disk
- 12 GPM @ 45 PSI
- Separate Trim Required
- Cartridge: HOP92.126BT

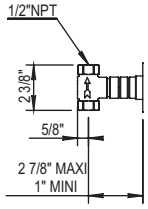

3/4'' Volume Control Rough - Closing Clockwise

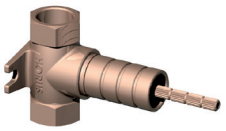

100.92.047 **BT** $205✓

- Unfinished Brass
- 1/4-Turn Ceramic Disk
- 16 GPM @ 45 PSI
- Separate Trim Required
- Cartridge: HOP92.027BT

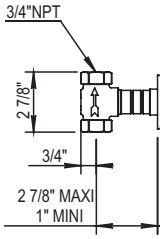

3/4'' Volume Control Rough - Closing CounterClockwise

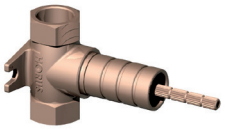

100.92.049 **BT** $205

- Unfinished Brass
- 1/4-Turn Ceramic Disk
- 16 GPM @ 45 PSI
- Separate Trim Required
- Cartridge: HOP92.127BT

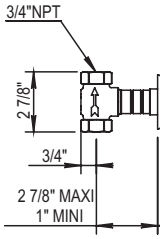

1/2'' Two function in wall diverter with no shared ports

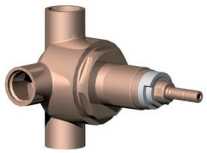

100.92.030 **BT** $540

- Unfinished Brass
- 4 way concealed diverter
- 2 Inlets / 2 Outlets
- Separate Trim Required
- Cartridge: HOP92.026BT

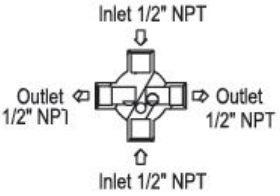

1/2'' Three function in wall diverter with no shared ports

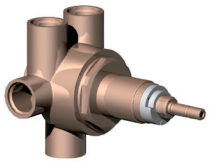

100.92.090 **BT** $600

- Unfinished Brass
- 5 way concealed diverter
- 2 Inlets / 3 Outlets
- Separate Trim Required
- Cartridge: HOP92.026BT

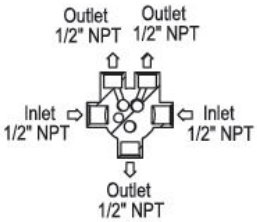

Shower

10.6'' Showerhead

ANTI-SCALE NOZZLES

B006976

- 10.6'' Diameter
- 1/2'' F Connection
- 50° Rotating Ball Joint
- Anti-Calcium Showerhead
- Flow restrictor available upon request

PC	$1030
PN	$1155
BN	$1395
Group 1	$1485
Group 2	$1895

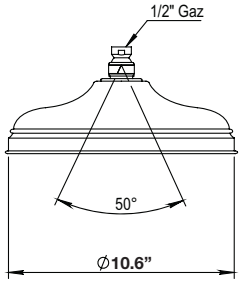

8'' Showerhead

ANTI-SCALE NOZZLES

100.92.925

- 8' Diameter
- 1/2'' F Connection
- 50° Rotating Ball Joint
- Anti-Calcium Showerhead
- Flow restrictor available upon request

PC	$955
PN	$1100
BN	$1340
Group 1	$1530
Group 2	$1960

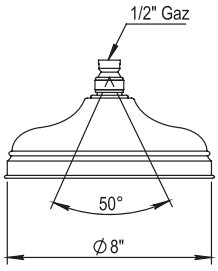

6'' Showerhead

ANTI-SCALE NOZZLES

100.92.945

- 6'' Diameter
- 1/2'' F Connection
- 50° Rotating Ball Joint
- Anti-Calcium Showerhead
- Flow restrictor available upon request

PC	$840
PN	$960
BN	$1175
Group 1	$1325
Group 2	$1560

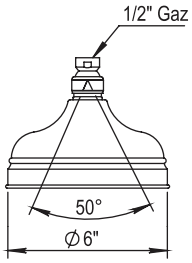

4-1/8'' Adjustable Shower Head

ANTI-SCALE NOZZLES

100.92.435

- 4⅛'' Diameter
- 1/2'' F Connection
- 50° Rotating Ball Joint
- Anti-Calcium Showerhead
- Flow restrictor available upon request

PC	$625
PN	$715
BN	$875
Group 1	$950
Group 2	$1155

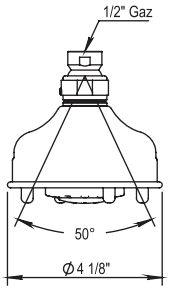

Ceiling Arm

100.92.540

- 5'' Ceiling Arm
- 1/2'' NPT Connection

PC	$265
PN	$300
BN	$350
Group 1	$395
Group 2	$495

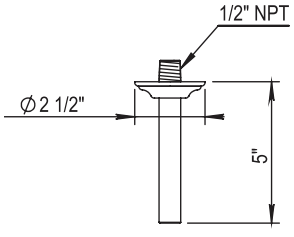

Shower Arm 90°

100.92.926

- 18'' Shower Arm
- 1/2'' NPT Connection
- Arm on a 90° Angle

PC	$420
PN	$480
BN	$575
Group 1	$650
Group 2	$790

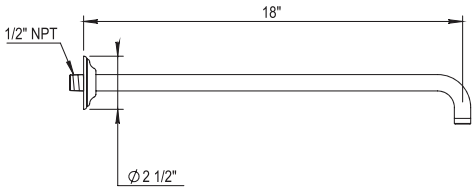

Shower

Angled Shower Arm

100.92.507

- 11.8'' Shower Arm
- 1/2'' NPT Connection
- Arm on a 45° Angle

PC	$475
PN	$525
BN	$595
Group 1	$650
Group 2	$825

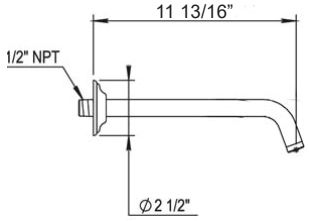

Angled Shower Arm

102.92.960

- 7'' Shower Arm
- 1/2'' NPT Connection
- Arm on a 45° Angle

PC	$420
PN	$480
BN	$565
Group 1	$625
Group 2	$790

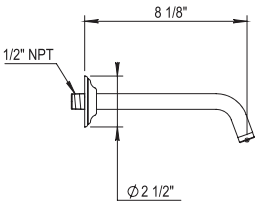

Massage Body Spray

ANTI-SCALE NOZZLES

100.00.573

- 1/2'' NPT Connection
- Anti-calcium spray

PC	$245
PN	$280
BN	$345
Group 1	$375
Group 2	$435

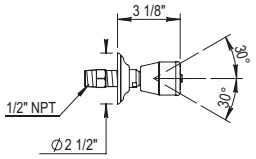

Contemporary Shower

10’’ Picot Showerhead with Shower Arm

100.40.536 **PC** $1095
NC $1280

- 10’’ Stainless Steel/ Polished Chrome Shower head
- 1/2’’ NPT Connection
- Anti-Calcium Picots
- Flow Rate 3.2GPM @45PSI
- 50° rotating ball joint
- Flow Restrictor available upon request

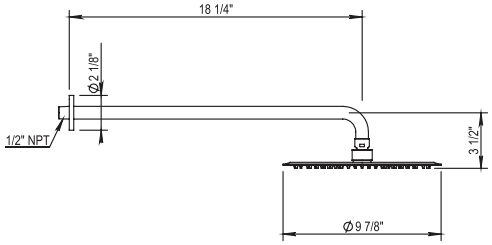

10’’ Picot Showerhead with Ceiling Arm

100.40.540 **PC** $995
NC $1170

- 10’’ Stainless Steel/ Polished Chrome Shower head
- 1/2’’ NPT Connection
- Anti-Calcium Picots
- Flow Rate 3.2GPM @45PSI
- 50° rotating ball joint
- Flow Restrictor available upon request

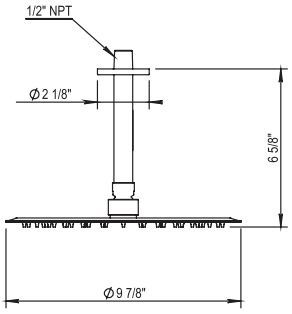

9’’x13’’ Picot Showerhead

B6409 **PC** $1185

- Stainless Steel Picot Showerhead
- 1/2’’ NPT Connection
- Anti-Calcium Picots
- Flow Rate 3.2GPM @45PSI
- 50° rotating ball joint
- Flow Restrictor available upon request

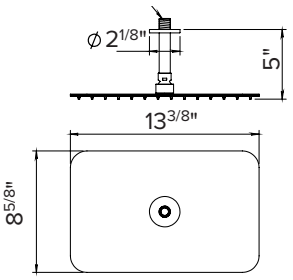

Concealed Body Spray

100.40.533 **PC** $335

- 1/2’’ Female NPT Inlet
- Rough-in not available separately
- Flow Rate 1.05 GPM
- Able to pivot in any direction

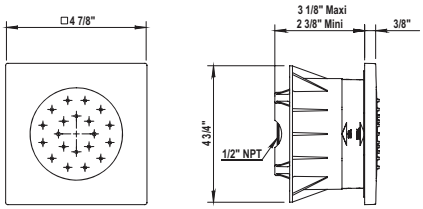

63 Eloise Accessories New!

Single Robe Hook

102.63.613

- Solid Brass
- Mounting Hardware Included
- White Porcelain logo cap
- To order without logo, use 100.63.613

PC	$265
PN	$295
BN	$365
Group 1	$390
Group 2	$495

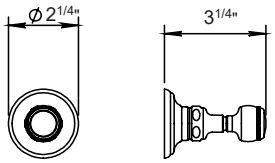

Double Robe Hook

102.63.614

- Solid Brass
- Mounting Hardware Included
- White Porcelain logo cap
- To order without logo, use 100.63.609

PC	$325
PN	$385
BN	$450
Group 1	$475
Group 2	$595

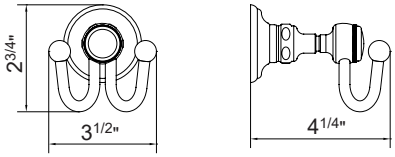

Toilet Paper Holder

102.63.617

- Solid Brass
- Mounting Hardware Included
- White Porcelain logo cap
- To order without logo, use 100.63.617

PC	$350
PN	$415
BN	$495
Group 1	$510
Group 2	$650

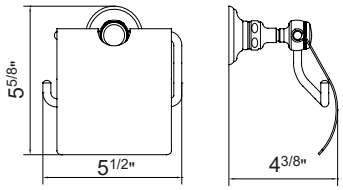

Spare Toilet Paper Holder

102.63.618

- Solid Brass
- Mounting Hardware Included
- White Porcelain logo cap
- To order without logo, use 100.63.618

PC	$290
PN	$310
BN	$415
Group 1	$420
Group 2	$540

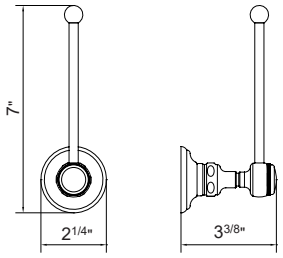

Towel Ring

102.63.609

- Solid Brass
- Mounting Hardware Included
- White Porcelain logo cap
- To order without logo, use 100.63.609

PC	$310
PN	$395
BN	$475
Group 1	$490
Group 2	$630

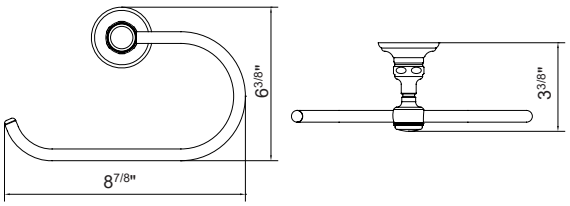

24'' Towel Rail

102.07.611

- Sold Brass
- Mounting Hardware included
- Can be cut to size

PC	$475
PN	$550
BN	$670
Group 1	$725
Group 2	$895

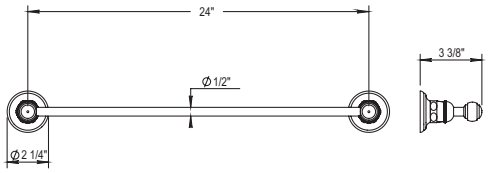

24'' Double Towel Rail

102.07.620

- Sold Brass
- Mounting Hardware included
- Can be cut to size

PC	$755
PN	$890
BN	$1050
Group 1	$1120
Group 2	$1435

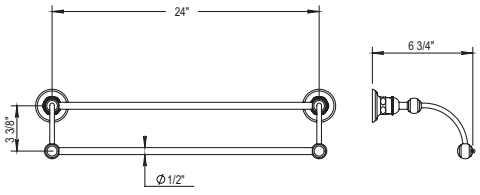

✓ **NOTE!** This check mark symbol indicates IN STOCK

Group 1: UB / AB / GAB / MC / GC **Group 2:** GB / CB / PG / MG

07 Montmartre Accessories

Towel Ring

102.07.609

- Solid Brass
- Mounting Hardware Included

PC	$325
PN	$370
BN	$435
Group 1	$470
Group 2	$605

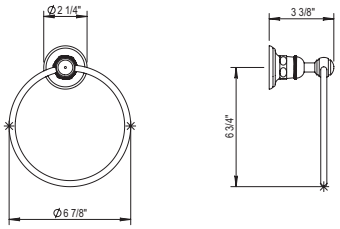

Single Robe Hook

102.07.613

- Solid Brass
- Mounting Hardware Included

PC	$440
PN	$510
BN	$620
Group 1	$675
Group 2	$725

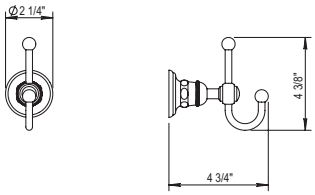

Double Robe Hook

102.07.614

- Solid Brass
- Mounting Hardware Included

PC	$355
PN	$415
BN	$485
Group 1	$525
Group 2	$670

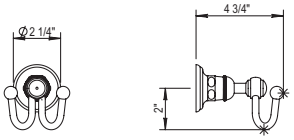

Double Posted Toilet Paper Holder

102.07.617

- Solid Brass
- Mounting Hardware Included

PC	$515
PN	$590
BN	$700
Group 1	$750
Group 2	$955

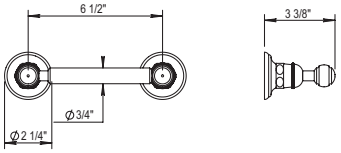

Single Posted Toilet Paper Holder

102.07.618

- Solid Brass
- Mounting Hardware Included

PC	$280
PN	$315
BN	$385
Group 1	$425
Group 2	$515

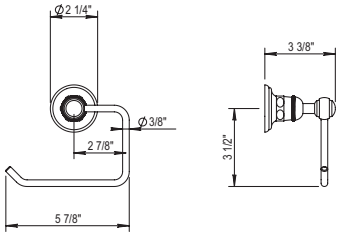

Toilet Brush Set

102.07.619

- Solid Brass
- Wall Hung
- Mounting Hardware Included

PC	$465
PN	$535
BN	$645
Group 1	$695
Group 2	$865

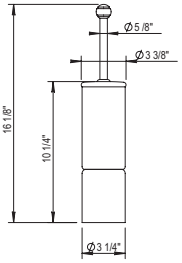

Wall Tumbler Set

102.32.604

- Solid Brass
- Porcelain Tumbler
- Mounting Hardware Included

PC	$495
PN	$520
BN	$550
Group 1	$720
Group 2	$925

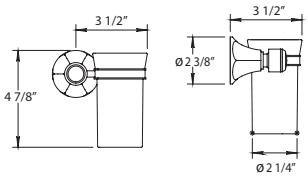

Wall Soap Dish

102.32.605

- Solid Brass
- Porcelain Soap Dish
- Mounting Hardware Included

PC	$495
PN	$520
BN	$550
Group 1	$720
Group 2	$920

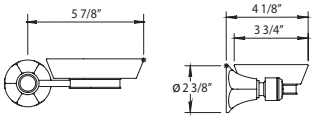

Soap Basket

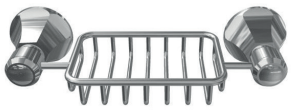

102.32.606

- Solid Brass
- Mounting Hardware Included

PC	$950
PN	$980
BN	$1010
Group 1	$1390
Group 2	$1775

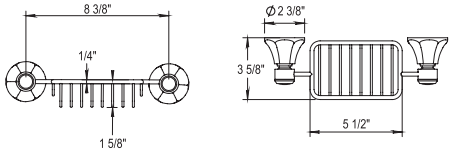

Soap Basket

102.32.607

- Solid Brass
- Mounting Hardware Included

PC	$1090
PN	$1145
BN	$1220
Group 1	$1580
Group 2	$2025

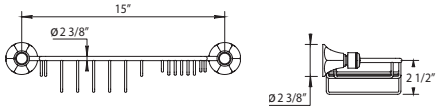

Towel Ring

102.32.609

- Solid Brass
- Mounting Hardware Included

PC	$480
PN	$495
BN	$545
Group 1	$705
Group 2	$905

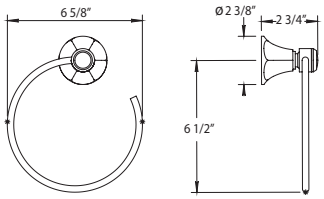

Single Robe Hook

102.32.613

- Solid Brass
- Mounting Hardware Included

PC	$410
PN	$425
BN	$450
Group 1	$590
Group 2	$755

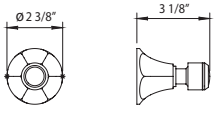

24'' Towel Bar

102.32.611

- Sold Brass
- Mounting Hardware included

PC	$950
PN	$995
BN	$1070
Group 1	$1390
Group 2	$1775

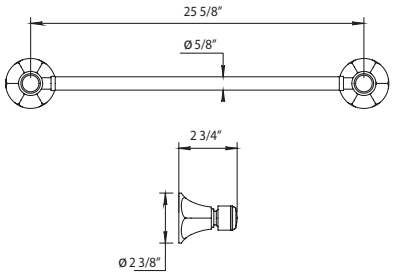

Hooded Toilet Paper Holder

102.32.617

- Sold Brass
- Mounting Hardware included

PC	$545
PN	$570
BN	$605
Group 1	$790
Group 2	$1015

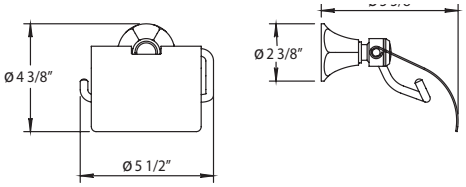

Spare Toilet Paper Holder

102.32.618

- Solid Brass
- Mounting Hardware Included

PC	$595
PN	$630
BN	$670
Group 1	$870
Group 2	$115

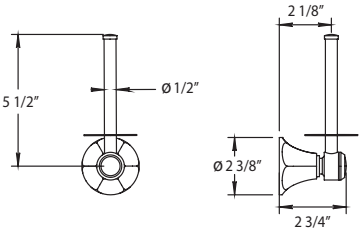

Toilet Brush Set

102.32.619

- Solid Brass
- Wall Hung
- Mounting Hardware Included

PC	$545
PN	$570
BN	$605
Group 1	$790
Group 2	$1015

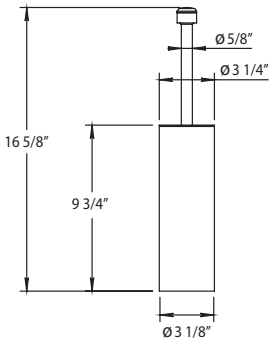

Octagonal Mirror - New!

102.68.001 $850

- Bevel Edge
- 600mm x 450mm x 5mm
- Wall Hung
- 1/4'' thick Wood Mounting Panel

102.68.002 $995

- Bevel Edge
- 800mm x 600mm x 5mm
- Wall Hung
- 1/4'' thick Wood Mounting Panel

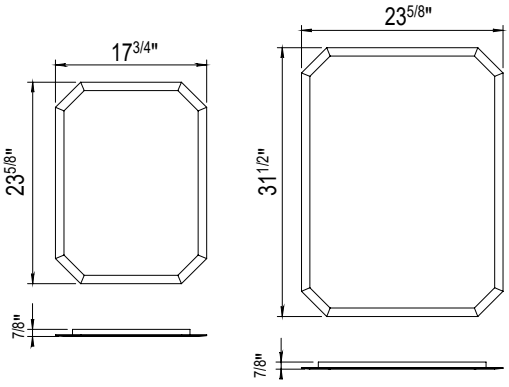

28 Dover Accessories

Soap Basket

102.28.606

- Sold Brass
- Mounting Hardware included

PC	$525
PN	$625
BN	$720
Group 1	$795
Group 2	$980

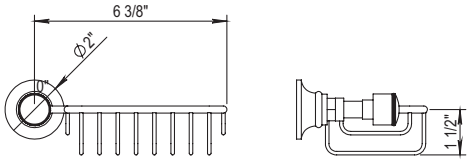

24'' Towel Rail

102.28.611

- Sold Brass
- Mounting Hardware included

PC	$820
PN	$860
BN	$920
Group 1	$1190
Group 2	$1525

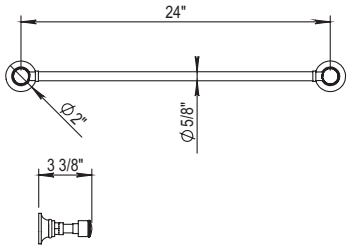

Single Robe Hook

102.28.613

- Solid Brass
- Mounting Hardware Included

PC	$310
PN	$355
BN	$425
Group 1	$455
Group 2	$585

Double Posted Toilet Paper Holder

102.28.617

- Solid Brass
- Wall Hung
- Mounting Hardware Included

PC	$750
PN	$790
BN	$805
Group 1	$1090
Group 2	$1395

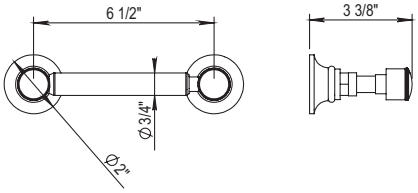

Single Posted Toilet Paper Holder

102.28.618

- Solid Brass
- Wall Hung
- Mounting Hardware Included

PC	$380
PN	$435
BN	$515
Group 1	$595
Group 2	$710

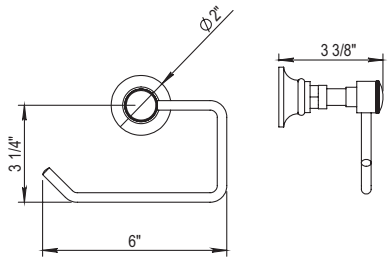

Ceramics

Ceramics New!

Ascott Series

25'' Basin

102.68.215 **BA** $1650

- Pre-drilled Single hole
- 3 hole knockouts

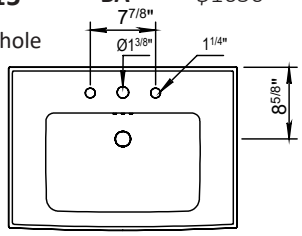

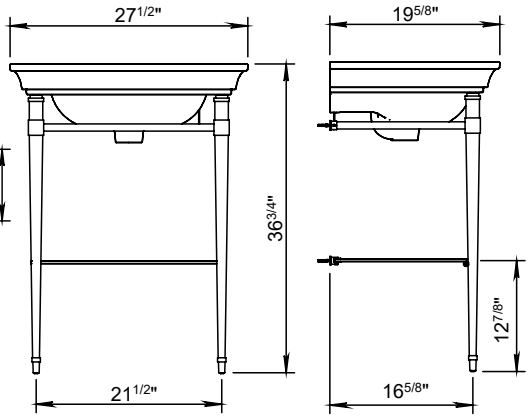

Metal Stand

102.68.211 **PC** $1195

- Specifically for 102.68.215 Basin

Pedestal

102.68.208 **BA** $1195

- Specifically for 102.68.215 Basin

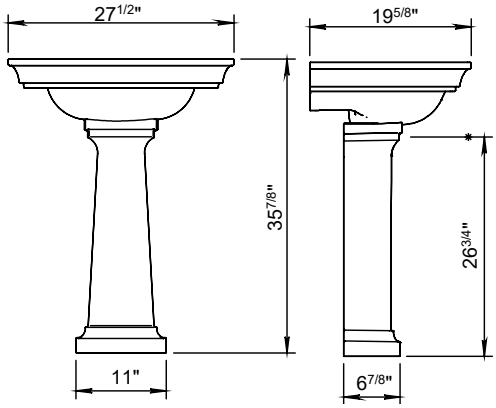

St Germain Series

28'' Basin

102.75.215 **BA** $895

- Pre-drilled Single hole
- 3 hole knockouts

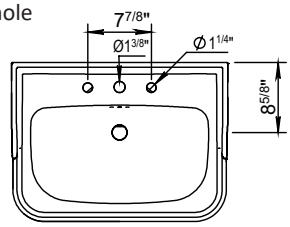

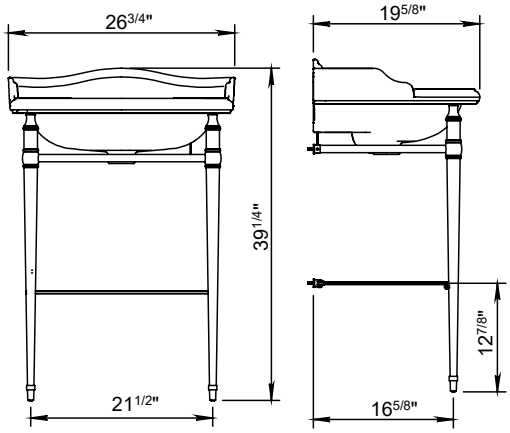

Metal Stand

102.75.211 **PC** $1195

- Specifically for 102.75.215 Basin

Pedestal

102.75.208 **BA** $595

- Specifically for 102.75.215 Basin

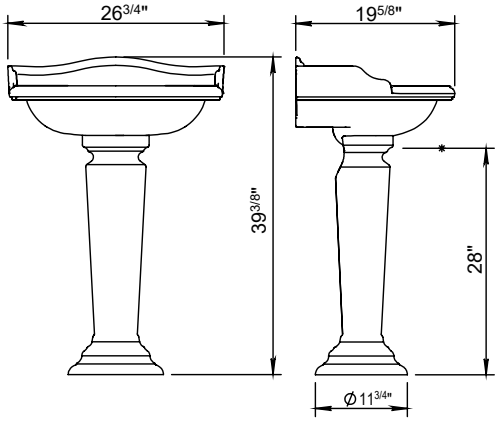

✓ **NOTE!** This check mark symbol indicates IN STOCK

Group 1: UB / AB / GAB / MC / GC **Group 2:** GB / CB / PG / MG

Kitchen

Kitchen Mixers

Emily Single Lever Kitchen Faucet

100.01.703

- Swivel Spout
- Ceramic Disc Cartridge
- Flow Rate: 2.2 GPM
- All Metal Lever Handle Available
- CalGreen Low Flow Aerator and Low Lead Available

PC	$1320
PN	$1385
BN	$1535
Group 1	$1975
Group 2	$2530

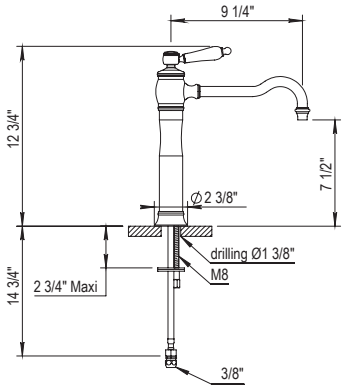

Emily Single Lever Kitchen Faucet

100.02.703

- Swivel Spout
- Ceramic Disc Cartridge
- Flow Rate: 2.2 GPM
- All Metal Lever Handle Available
- Drain NOT included
- CalGreen Low Flow Aerator and Low Lead Available

PC	$1320
PN	$1385
BN	$1535
Group 1	$1975
Group 2	$2530

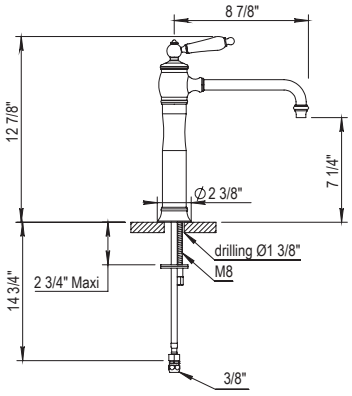

Emily Single Lever Kitchen Faucet with Side Spray

100.01.723

- Swivel Spout
- Ceramic Disc Cartridge
- Flow Rate: 2.2 GPM
- All Metal Lever Handle Available
- CalGreen Low Flow Aerator and Low Lead Available

PC	$2110
PN	$2180
BN	$2315
Group 1	$3085
Group 2	$3950

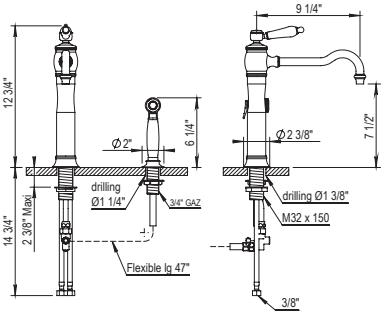

Emily Single Lever Kitchen Faucet with Side Spray

100.02.723

- Swivel Spout
- Ceramic Disc Cartridge
- Flow Rate: 2.2 GPM
- All Metal Lever Handle Available
- CalGreen Low Flow Aerator and Low Lead Available

PC	$2110
PN	$2180
BN	$2315
Group 1	$3085
Group 2	$3950

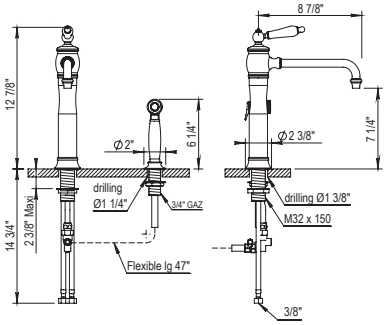

Kitchen Mixers- Montmartre

2 Hole Bridge Faucet

102.07.101

102.50.101

- Swivel Spout
- 1/4 turn Ceramic Disc
- Flow Rate: 2.2 GPM
- Spout reach: 9¼''
- CalGreen Low Flow Aerator and Low Lead Available

PC	$1875
PN	$1980
BN	$2130
Group 1	$2720
Group 2	$3485

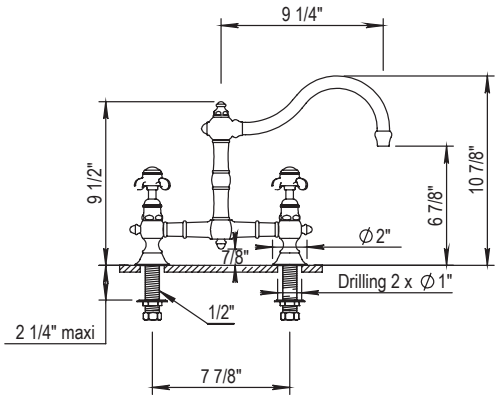

Single Hole Two-Handle Bar Faucet

100.07.139

- Swivel Spout
- 1/4 turn Ceramic Disc
- Flow Rate: 2.2 GPM
- Spout reach: 6¾''
- CalGreen Low Flow Aerator and Low Lead Available

PC	$1465
PN	$1525
BN	$1640
Group 1	$2120
Group 2	$2720

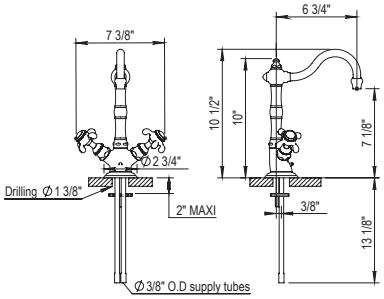

Single Hole Two-Handle Faucet with Side Spray

100.07.123

- Swivel Spout
- 1/4 turn Ceramic Disc
- Flow Rate: 2.2 GPM
- Spout reach: 9¼''
- 47'' Spray Hose
- Vacuum Breaker included in hand-held
- CalGreen Low Flow Aerator & Low Lead Available

PC	$2250
PN	$2330
BN	$2480
Group 1	$3270
Group 2	$4185

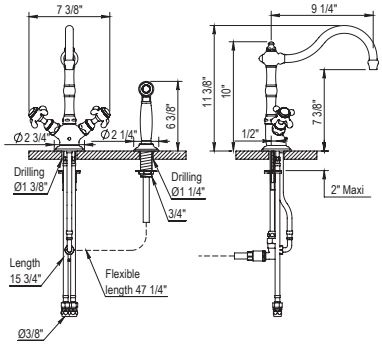

3 Hole Kitchen Faucet with Side Spray

102.07.124

102.50.124

- Swivel Spout
- 1/4 turn Ceramic Disc
- Flow Rate: 2.2 GPM
- Spout reach: 9¼''
- 47'' Spray Hose
- Vacuum Breaker included in hand-held
- CalGreen Low Flow Aerator & Low Lead Available

PC	$2495
PN	$2590
BN	$2745
Group 1	$3620
Group 2	$4640

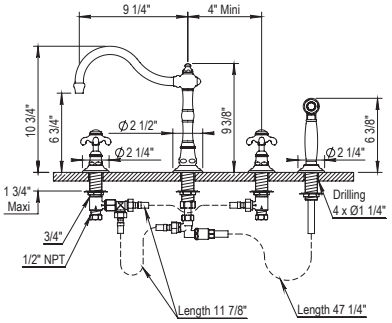

Kitchen Mixers- Saint Germain

Two Hole Bridge Faucet

102.66.101	**PC**	$1875
160.67.101	**PN**	$1980
161.67.101	**BN**	$2130
162.67.101	**Group 1**	$2795
	Group 2	$3330

- Swivel Spout
- 1/4 turn Ceramic Disc
- Flow Rate: 2.2 GPM
- Spout reach: 9¼''

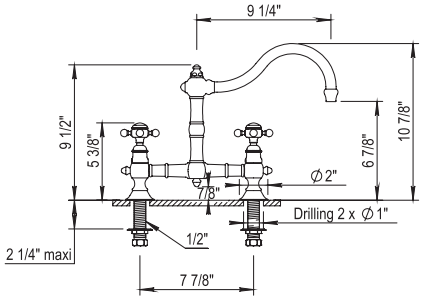

3 Hole Kitchen Faucet with Side Spray

102.66.141	**PC**	$1535
160.67.141	**PN**	$1600
161.67.141	**BN**	$1700
162.67.141	**Group 1**	$2230
	Group 2	$2855

- Swivel Spout
- 1/4 turn Ceramic Disc
- Flow Rate: 2.2 GPM
- 47'' Spray Hose
- Vacuum Breaker in Handspray
- Spout reach: 9¼''

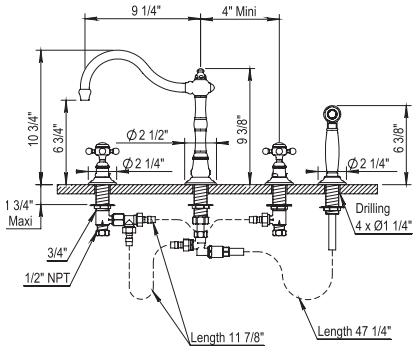

Single Hole 2 Handle Faucet with Side Spray

102.66.123	**PC**	$2250
	PN	$2330
	BN	$2480
	Group 1	$3270
	Group 2	$4185

- Swivel Spout
- 1/4 turn Ceramic Disc
- Flow Rate: 2.2 GPM
- 47'' Spray Hose
- Vacuum Breaker in Handspray

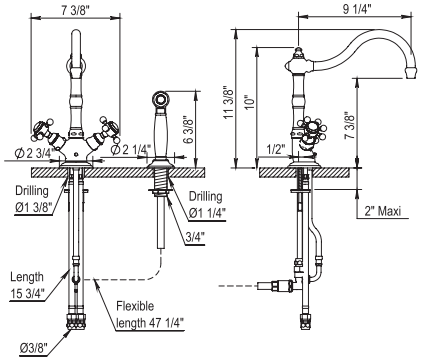

Single Hole Two-Handle Bar Faucet

102.66.139	**PC**	$1465
	PN	$1525
	BN	$1640
	Group 1	$2195
	Group 2	$2650

- Swivel Spout
- 1/4 turn Ceramic Disc
- Flow Rate: 2.2 GPM
- Spout reach: 6¾''

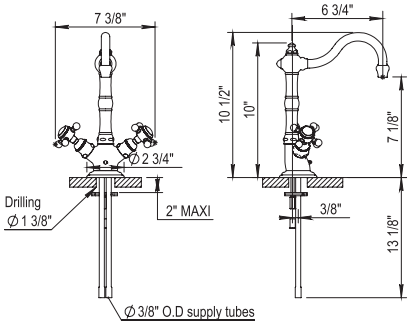

✓ **NOTE!** This check mark symbol indicates IN STOCK

Group 1: UB / AB / GAB / MC / GC **Group 2:** GB / CB / PG / MG

Kitchen Mixers

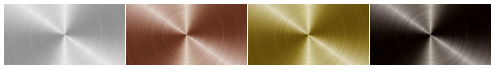

SS Stainless Steel | COP Pink Copper PVD | BG Brushed Gold PVD | GM Gun Metal PVD

2 Hole Gooseneck Bridge Faucet

102.66.141	**PC**	$1535
160.67.141	**PN**	$1600
161.67.141	**BN**	$1700
162.67.141	**Group 1**	$2230
	Group 2	$2855

- Swivel Spout
- 1/4 turn Ceramic Disc
- 7⅞'' Centres +/- 2⅛''
- Flow Rate: 2.2 GPM
- Spout reach: 9¼''

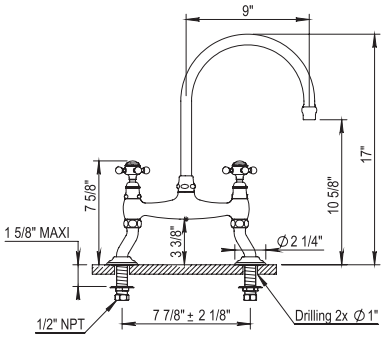

Single Hole Two-Handle Gooseneck Faucet

102.66.133	**PC**	$1035
	PN	$1105
	BN	$1220
	Group 1	$1370
	Group 2	$1755

- Swivel Spout
- 1/4 turn Ceramic Disc
- Flow Rate: 2.2 GPM
- Spout reach: 8⅛''

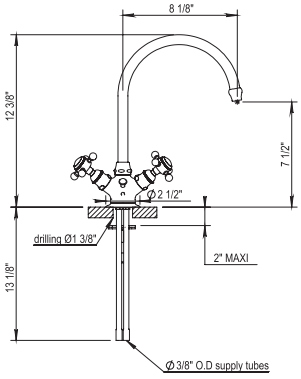

Single Lever Kitchen Mixer

Directional on 160°

102.65.703	**PC**	$1370
	PN	$1440
	BN	$1540
	Group 1	$2080
	Group 2	$2665

- Swivel Spout
- Flow Rate: 2.2 GPM
- Flexible Hoses

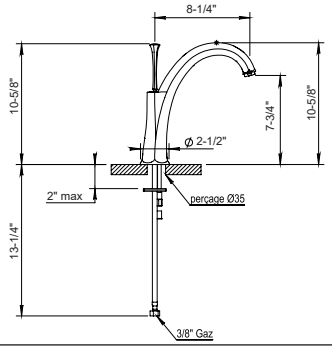

Pull Down Dual Spray Kitchen Mixer

102.81.704	**SS**	$4170
	COP	$4170
	BG	$4170
	GM	$4170

- Solid Brass
- Flow Rate: 2.2 GPM
- Spout Reach: 8¼''

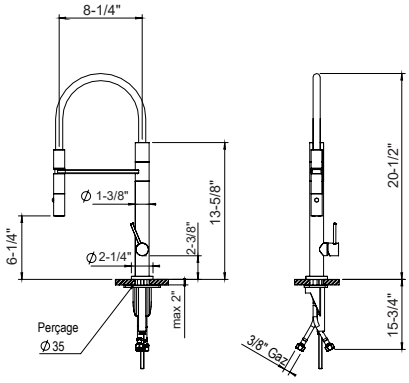

Pull Out Kitchen Mixer

102.81.723	**SS**	$1985
	COP	$1985
	BG	$1985
	GM	$1985

- Solid Brass
- Flow Rate: 2.2 GPM
- Swivel Spout
- Spout Reach: 8⅝''

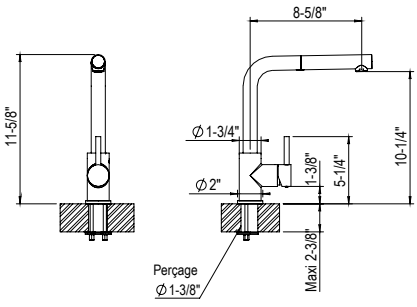

WARRANTY / GARANTIE

All products are guaranteed against any operating defect for a period of five (5) years. The warranty shall not apply to conspicuous defects. The following are also excluded from the warranty:

- **Wear to the joints, ceramic heads or surface treatments (with the exception of chrome)**
- **Damage to parts resulting from incorrect assembly that was not carried out by a qualified professional in accordance with good professional practices**
- **Damage to parts resulting from the seller's assembly instructions**
- **Damage to parts resulting from the standards and DTU (single technical documents) in force**
- **Defects and damage resulting from abnormal use**
- **Defects and damage resulting from the presence of abrasive hard water or water with non-standard electrolytic or chemical properties**
- **Defects and damage resulting from transport or installation**
- **Defects and damage resulting from incorrect cleaning**
- **Postage, freight and/or handling charges of the product for warranty repairs**
- **Installation and/or removal fees of the products**

CODE		DESCRIPTION	FINISH | PRICE
HOP92.410		White Porcelain 'Chaud' Cap for Montmartre and Saint Germain Series	**PC $22**
HOP92.411		White Porcelain 'Froid' Cap for Montmartre and Saint Germain Series	**PC $22**
HOP92.412		White Porcelain Thermostatic/Volume Control Cap for Montmartre and Saint Germain Series	**PC $22**
HOP92.940		Porcelain Cap Holder in 2 Parts without Caps for Montmartre and Saint Germain Series Consists of Decorative Ring and Brass Ring	**PC $30** **PN $35** **BN $35** **Group 1 $35** **Group 2 $35**
HOP92.031		White Porcelain 'Chaud' Cap for Dover & Ascott Series	**PC $22**
HOP92.032		White Porcelain 'Froid' Cap for Dover & Ascott Series	**PC $22**
HOP92.037		White Porcelain Thermostatic / Volume Control Cap for Dover & Ascott Series	**PC $22**
HOP92.004		Porcelain Cap Holder in 2 Parts without Caps for Dover Series. Consists of Decorative Ring and Brass Ring	**PC $30** **PN $35** **BN $35** **Group 1 $40** **Group 2 $40**
HOPB00.4912		Metal Blank Cap	**PC $60** **PN $70** **BN $70**
HOPB00.4913		Metal 'C' Cap for Cold	**Group 1 $95** **Group 2 $120**
HOPB00.4914		Metal 'H' Cap for Hot	
HOP6312BT		Cartridge for Mixing Valve Ref: 92.585, 92.591, 92.592, 92.593, 92.595, 92.597, 40.526, 40.580, 40.581, 65.745 produced BEFORE 01/2017	**BT $250**
93.201		Handle - Washer - Cup for 65.708	**PC $120** **PN $130** **BN $140** **Group 1 $210** **Group 2 $255**

CODE		DESCRIPTION	FINISH | PRICE
HOP92.118BT.L		Cartridge ½'' Stem Length ¾'' Closing on the Left For all standard 3-hole faucets and 4 hole Kitchen Faucets	**BT $110**
HOP92.118BT.R		Cartridge ½'' Stem Length ¾'' Closing on the Right For all standard 3-hole faucets and 4 hole Kitchen Faucets	**BT $110**
HOP92.126BT		Cartridge ½'' Stem Length 3'' Closing on the Left For 100.92.048BT and all wall mounted lavs	**BT $120**
HOP92.026BT		Cartridge ½'' Stem Length 3'' Closing on the Right For 100.92.046BT and all wall mounted lavs	**BT $120**
HOP92.127BT		Cartridge ¾'' Stem Length 3'' Closing on the Left For 100.92.047BT (can be cut to size)	**BT $135**
HOP92.027BT		Cartridge ¾'' Stem Length 3'' Closing on the Right For 100.92.049BT (can be cut to size)	**BT $135**
HOP92.149BT.L		Cartridge ¾'' Stem Length ¾'' Closing on the Left For all Tub Fillers ending in .464, .434, .435, .498	**BT $110**
HOP92.149BT.R		Cartridge ¾'' Stem Length ¾'' Closing on the Right For all Tub Fillers ending in .464, .434, .435, .498	**BT $110**
HOP92.280BT		Cartridge for Petra Faucet 102.37.708, 102.39.708, & 102.37.719, 102.39.719	**BT $120**
HOP92.953BT		Cartridge and Chrome Handle for New Wave 40.708	**PC $290**
HOP92.561BT		Cartridge for Thermostatic Mixing Valve 102.92.319BT	**BT $515**
HOP92.999BT		Cartridge for Thermostatic Mixing Valve 102.92.524BT	**BT $1475**
HOPB00.6077BT		Cartridge for Thermostatic Mixing Valves 100.92.599BT, 100.92.593BT, 100.92.599BT, 100.92.595BT	**BT $255**
HOP92.788BT		Cartridge for Thermostatic Showers for Montmartre and Saint Germain ending in .744/.754	**BT $440**
HOP92.553BT		2pcs Volume Control Cartridge for Montmartre & Saint Germain Exposed Showers ending in .744/.754	**BT $140**
HOP92.280BT		Cartridge for reference .708, .711, .700, .706, .718, .719, .765, .766 For Series 30/31/37/39/47/49/83	**BT $115**
HOP5360BT		Cartridge for reference 01.708, 01.703, 01.719, 01.723, 02.703, 02.708, 02.719, 02.723	**BT $70**
HOP6213BT	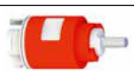	Cartridge for mixing valve 102.65.708	**BT $60**

CODE		DESCRIPTION	FINISH | PRICE
HOP100.92.163BT		Diverter Kit for Single Hole Kitchen Faucets with Side Spray for 102.07.123/102.50.123 and similar Saint Germain Kitchen Faucets	**BT $195**
HOP100.92.164BT		Diverter Kit for 3 Hole Kitchen Faucets with Side Spray for 102.07.124/102.50.124 and similar Saint Germain Kitchen Faucets	**BT $255**
HOP92.812BA		White Plastic Adaptor for Volume and Thermostatic Control Trims	**BA $10**
HOP92.011BT		Aerator 3/8'' for Dover and Montmartre Faucets	**BA $60**
HOP92.206		Complete Housing and Aerator 3/8'' for Anthea and St Germain Faucets	**PC $80** **PN $80** **BN $80** **Group 1 $85** **Group 2 $90**
HOP92.069		Complete Housing and Aerator 3/8'' for Dover and Montmartre Faucets	**PC $75** **PN $80** **BN $95** **Group 1 $110** **Group 2 $130**
HOP92.994BT		8'' Extension Kit for 100.92.553BT and 100.92.599BT Thermostatic. Can be cut to size	**BT $410**
HOP92.995BT		8'' Extension Kit for 102.92.525BT, 102.92.591BT and 102.92.319 Thermostatic. Can be cut to size	**BT $265**
HOP92.034BT		**1-1/2''** Extension (3 Part Kit) for Volume Control Roughs 92.046, 92.047, 92.048, 92.049. Can **not** be cut to size	**BT $140**
HOP92.032BT		**3/4''** Extension (3 Part Kit) for Volume Control Roughs 92.046, 92.047, 92.048, 92.049. Can **not** be cut to size	**BT $140**
HOP92.092BT	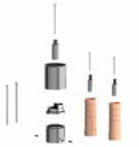	3/4'' Extension Kit for 100.92.597BT	**BT $780**
HOP92.093BT		3/4'' Extension Kit for 100.92.583BT	**BT $890**
HOP92.994BT	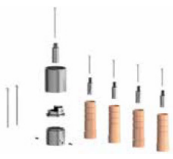	3/4'' Extension Kit for 100.92.584BT	**BT $410**

CODE		DESCRIPTION	FINISH | PRICE
HOP92.023BT		Lift & Turn Drain used with 01.703 & 02.703	**PC $145** **PN $150** **BN $165** **Group 1 $230** **Group 2 $295**
HOP150.92.110		Metal Handle Anti-Calc Retro Hand Spray	**PC $435** **PN $450** **BN $470** **Group 1 $635** **Group 2 $810**
HOP92.110		Porcelain Handle Anti-Calc Retro Hand Spray	**PC $415** **PN $425** **BN $450** **Group 1 $565** **Group 2 $720**
102.07.472		Deck bath spout 9.5'' • Fixed Spout with Integrated Diverter • Includes T Connections	**PC $930** **PN $970** **BN $1000** **Group 1 $1625** **Group 2 $1865**
102.07.478 **102.50.478**		3/4''Deck Valve (Right) for Montmartre • Complete Rough and Trim • 1/4 turn Ceramic Disk	
102.07.479 **102.50.479**		3/4''Deck Valve (Left) for Montmartre • Complete Rough and Trim • 1/4 turn Ceramic Disk	**PC $550** **PN $575** **BN $595** **Group 1 $775** **Group 2 $990**
102.66.478 **160.67.478** **161.67.478** **162.67.478**		3/4''Deck Valve (Right) for Saint Germain • Complete Rough and Trim • 1/4 turn Ceramic Disk	
102.66.479 **160.67.479** **161.67.479** **162.67.479**		3/4''Deck Valve (Left) for Saint Germain • Complete Rough and Trim • 1/4 turn Ceramic Disk	
HOP92.998BT		2-⅜'' Standard Axis Kit for 102.92.524BT, 102.92.591BT	**BT $160**
HOP92.015		Stopper and Adaptor For Horus Drains	**PC $95** **PN $110** **BN $140** **Group 1 $160** **Group 2 $180**

CODE		DESCRIPTION	FINISH | PRICE
HOP00.465		Hose for Hand Shower for 102.07.464/102.50.464	**PC $175** **PN $205** **BN $240** **Group 1 $265** **Group 2 $305**
HOP00.585		Hose for Hand Shower for 102.01.589/102.01.532	**PC $175** **PN $205** **BN $245** **Group 1 $285** **Group 2 $295**
HOP92.250		Spray Hose 1.25m for Kitchen Faucet Side Spray	**PC $205**
HOP92.249		Side Spray for Montmartre & Saint Germain Kitchen Faucets	**PC $305** **PN $320** **BN $345** **Group 1 $490** **Group 2 $625**
92.111PC		Porcelain Handle for Handspray	**PC $25**

HORUS

Quality & Workmanship

Raw Material

Rough components used for the making of HORUS taps are made of solid brass, which is an alloy of copper and zinc. According to their characteristics and their manufacturing processes, the rough components are realized through different techniques: especially casting, die stamping, and screw cutting.

Then, each component must be polished, usually by hand, in order to obtain a perfectly smooth rough component, without any unevenness, ready to get the surfacing which will give it its final shade. A close handmade control is then done before the finishes itself.

Finishes

HORUS offers his customers the largest possible choice of finishing shades, in order to allow private customers, architects and interior designers…to decorate on demand the fittings finishes as best as possible according to the style of the bathroom or the kitchen. The finishes are made on each component before assembling the complete tap set.

The most usual finishes for taps and fittings is chrome coating. This lightly blue glint finish is obtained by soaking rough components into several baths, by electrolysis.

Chrome, a tough and stainless metal, brings protecting qualities to the coating thus obtained. Shiny or mat nickel finishes, which have slightly different shades from the chrome ones, are obtained by electrolysis as well. The process is the same for gold coating which is realised on request only.

The chrome and nickel finishes are procuded in series, and the most usual references of HORUS ranges are usually stock available, which allows a short delivery.

Other finishes, named decoration finishes, are obtained through a different process. It doesn't consist in a coating on the rough piece, but in a reaction on the rough piece itself caused by soaking it into an acid bath, thus changing its outer aspect.

This process is of course handmade: it's a tricky operation, the result of which depends at the same time on the content of the bath, the characteristics of the piece, the temperature and hydrothermal conditions of the hall, the time of soaking…These conditions demand a sharp skill and experience.

The components are usually given a shiny or mat glaze, then put in oven in order to protect their surfaces from the constraints they will have to stand.

Maintenance

Water usually contains limestone and mineral residues that settle on the taps surfaces after water has evaporated. Some marks of products such as toothpaste, cosmetics, fruits, acid vegetables or even wine could damage the coating.

The handmade characteristics of these tricky successive operations make each HORUS tap set to be a unique article with very specific shades. These shades should be kept undamaged for a long time thanks to a day after day maintenance, carefully carried out without any aggressive or abrasive cleaning product. Chlorine and bleach are luxury taps and fitting enemies. Acid, ammonia and soda should not be used either. Scourers, scouring powders and disinfectant must be avoided as well.

The best is to daily clean the taps with water and soap, then wipe them with a smooth duster such as soft damp cloth or micro fibre. Moreover, this method is economic and respects environment.

The use of DECAL, anti limestone cleaner for taps, gets the cleaning of surfaces much easier. DECAL could be used for every HORUS finishes and protects your taps against mineral residues present in every sanitary facilities.
DECAL can be used as often as necessary.

Décal - 250 ml
Anti limestone cleaner
for bath fixture
Réf. B005268PE

HORUS Quality

Specialized in the manufacturing of faucet factory top-of-the-range market since 1980, HORUS has chosen déliberement the quality for philosophy of company.

From the conception of a product to its manufacturing, HORUS pursues a requirement of absolute quality: components handled in the mass, suppliers selected according to their certifications and ratifications, quality control in all the stages of the production, manufacturing of the faucet factory in his factory, in Obernai, according to a robust know-how.

This constant research for the absolute quality allows HORUS to offer to his customers manufactured-in-France goods through a rich range of collections going of the retro or neo-classic style until the most contemporary and minimalistes forms et answering in the requirements of the various international standards.

Quality, fonctionality, and design illustrate perfectly the universe of the luxury faucet factory, imagined by HORUS.

A.C.S. FRANCE · ETA DANMARK · JWWA JAPON · PUB SINGAPOUR

CSA C US · NSF C US · CAL GREEN AB1953 COMPLIANT · EPV Entreprise du Patrimoine Vivant

* Please ask for products certified

HORUS

2024 PRICE LIST | LISTE DE PRIX

CANADA

Designer Brands for Kitchen & Bath
streamline CANADA

ORDERS@STREAMLINECANADA.CA

U.S.A.

Aloré Design

ORDERDESK@ALOREDESIGN.COM

1-866-503-9796